UNIVERSITY OF SOUTHERN MISSISSIPPI
SCHOOL OF NURSING
HATTIESBURG, MISSISSIPPI

AUDIO VISUAL SYSTEMS INTEGRATION

CONSULTANT

Gracenote Consulting, Inc.
PO Box 3342
Meridian MS 39303

V: 601.207.0510
F: 601.500.5330

http://www.gracenoteconsulting.com

Sheet Index

AV 0.1	Title Sheet
AV 0.2	Backbox & Raceway Schedule (1 of 2)
AV 0.3	Backbox & Raceway Schedule (2 of 2)
AV 1.1	First Floor AV Raceway Plan Part A
AV 1.2	First Floor AV Raceway Plan Part B
AV 1.3	First Floor AV Raceway Reflected Ceiling Plan Part A
AV 1.4	First Floor AV Raceway Reflected Ceiling Plan Part B
AV 1.5	Second Floor AV Raceway Plan Part A
AV 1.6	Second Floor AV Raceway Plan Part B
AV 1.7	Second Floor AV Raceway Reflected Ceiling Plan Part A
AV 1.8	Second Floor AV Raceway Reflected Ceiling Plan Part B
AV 1.9	Third Floor AV Raceway Plan Part A
AV 1.10	Third Floor AV Raceway Plan Part B
AV 1.11	Third Floor AV Raceway Reflected Ceiling Plan Part A
AV 1.12	Third Floor AV Raceway Reflected Ceiling Plan Part B
AV 1.13	AV MDF Details (Control Room 141)
AV 2.1	First Floor Projection Plan (1 of 2)
AV 2.2	First Floor Projection Plan (2 of 2)
AV 2.3	First Floor Loudspeaker Plan (1 of 2)
AV 2.4	First Floor Loudspeaker Plan (2 of 2)
AV 3.0	Single Line Notes
AV 3.1	Lecture Hall 140 Single Line Diagram
AV 3.2	Lecture Hall 140 Single Line Diagram, Schedules
AV 3.3	Large Classroom 144 Single Line Diagram
AV 3.4	Large Classroom 144 Schedules
AV 3.5	Large Classroom 147 Single Line Diagram
AV 3.6	Large Classroom 147 Schedules
AV 3.7	Large Classroom 145 Single Line Diagram
AV 3.8	Large Classroom 145 Schedules
AV 3.9	Large Classroom 146 Single Line Diagram
AV 3.10	Large Classroom 146 Schedules
AV 3.11	Standard Classroom 121 Single Diagram, Schedules
AV 3.12	Standard Classroom 122 Single Line Diagram
AV 3.13	Standard Classroom 122 Schedules
AV 3.14	Standard Classroom 124 Single Line Diagram, Schedules
AV 3.15	Seminar Room 130 Single Line Diagram, Schedules
AV 3.16	Seminar Room 134 Single Line Diagram, Schedules
AV 3.17	Digital Signage Single Line, Schedules
AV 3.18	Lab Area Data Distribution Single Line, Schedules
AV 4.1	Panel Elevations

STUDIO SOUTH
ARCHITECTS, PLLC

in association with

Eley Associates / Architects, P.A.

628 Washington Avenue, Suite C
Ocean Springs, MS 39564
228-762-8575 fax 769-9545

CONSULTANTS

STRUCTURAL

Structural Design Group
Contact: Thomas C. Schaeffer, P.E.
220 Great Circle Road Suite 106
Nashville, TN 37228
Tele: 615-255-5537

MECHANICAL

Eldridge & Associates, P.A.
Contact: Jimmy W. Eldridge, P.E.
604 HWY. 80 West Suite U
Clinton, MS
Tele: 601-925-5258

ELECTRICAL

Watkins & O'Gwynn
Contact: Holden O'Gwynn, Jr., P.E.
4523 Office Park Drive
Jackson, MS 39206
Tele: 601-982-3313

CIVIL

Ford Engineering Services, PLLC
Contact: Joel Ford
2010 Oak Grove Road
Building 4, Suite 1
Hattiesburg, MS 39402
Tele: 601-264-7296

PROFESSIONAL SEALS

PROJECT TITLE

GS# 108-261

School of Nursing Building

University of Southern Mississippi
(Institutions of Higher Learning)
Hattiesburg, MS

ISSUE

MARK	DATE	DESCRIPTION
	02-21-14	CONSTRUCTION DOCUMENTS
	10.1.15	Revised per owner's requirements
	12.1.15	AV Bid Documents
	4.4.16	AV Bid Documents Rev1

MANAGEMENT

PROJECT NO:
PROJECT AREA:
CAD DWG FILE:
DRAWN BY:
CHECKED BY:

SHEET TITLE

AV TITLE SHEET

AV 0.1

Location	Designator	Box	Mounting Height	Mounting Config	Supplied By	Installed By	Function	Note	Power Receptacle	Isolated Power	Circuiting
Academic Resource Center 203	LS-203-1	4S	Above accessible LAT ceiling	Surface/Suspended	Div 16	Div 16	Loudspeaker Pull Box		NA	NA	NA
Academic Resource Center 203	LS-203-2	4S	Above accessible LAT Ceiling	Surface/Suspended	Div 16	Div 16	Loudspeaker Pull Box		NA	NA	NA
Academic Resources Center 203	DS-203-1	4S w/2G trim	+60"	Flush	Div 16	Div 16	Digital Sign Plug Box		120VAC 20A Duplex	NA	DS2
Academic Resources Center 203	DS-203-2	4S w/2G trim	+60"	Flush	Div 16	Div 16	Digital Sign Plug Box		120VAC 20A Duplex	NA	DS2
Academic Resources Center 203	DS-203-3	4S w/2G trim	+60"	Flush	Div 16	Div 16	Digital Sign Plug Box		120VAC 20A Duplex	NA	DS2
Academic Resources Center 203	DS-203-4	4S w/2G trim	+60"	Flush	Div 16	Div 16	Digital Sign Plug Box		120VAC 20A Duplex	NA	DS3
Academic Resources Center 203	DS-203-5	4S w/2G trim	+60"	Flush	Div 16	Div 16	Digital Sign Plug Box		120VAC 20A Duplex	NA	DS3
Anesthesia Skills Center	LC-248-1	2G	+12" AFF	Flush	Div 16	Div 16	Data/Audio Plug Box		NA	NA	NA
Anesthesia Skills Center	LC-248-2	2G	+12" AFF	Flush	Div 16	Div 16	Data/Audio Plug Box		NA	NA	NA
Anesthesia Skills Center	LC-248-3	2G	+12" AFF	Flush	Div 16	Div 16	Data/Audio Plug Box		NA	NA	NA
Anesthesia Skills Center	LC-248-4	2G	+12" AFF	Flush	Div 16	Div 16	Data/Audio Plug Box		NA	NA	NA
Break Out Lobby 142	DS-142	4S w/2G trim	+60"	Flush	Div 16	Div 16	Digital Sign Plug Box		120VAC 20A Duplex	NA	DS1
Conference 326	CAM-326	4S w/2G trim	+52" AFF	Flush	Div 16	Div 16	Camera Plug Box	Mounts above VD box, verify location with consultant.	120VAC 20A Duplex	NA	C336
Conference 326	FP-326-1	Ace 102BBXW	Floor	Flush	Div 16	Div 16	AV Plug Box	Mounts under table, verify location with architect.	120VAC 20A duplex, mounts inside floor pocket	No	Dedicated
Conference 326	FP-326-2	Ace 102BBXW	Floor	Flush	Div 16	Div 16	AV Plug Box	Mounts under table, verify location with architect.	120VAC 20A duplex, mounts inside floor pocket	No	Dedicated
Conference 326	IDF-326	NEMA Type 1 12Wx6Hx4D	+12" AFF	Flush	Div 16	Div 16	AV Equipment Plug Box		120VAC 20A Duplex	NA	Dedicated
Conference 326	LSJ-326	4S	Above accessible ceiling	Surface/Suspended	Div 16	Div 16	Loudspeaker Pull Box		NA	NA	NA
Conference 326	PP-326	NEMA Type 1 664	+18" AFF	Flush	Div 16	Div 16	AV Plug Box		120VAC 20A Duplex	No	Dedicated
Conference 326	VD-326	NEMA Type 1 444	+60" AFF	Flush	Div 16	Div 16	Video Display Plug Box		120VAC 20A Duplex	NA	Dedicated
Conference 362	CAM-362	4S w/2G trim	+52" AFF	Flush	Div 16	Div 16	Camera Plug Box	Mounts above VD box, verify location with consultant.	120VAC 20A Duplex	NA	C336
Conference 362	FP-362-1	Ace 102BBXW	Floor	Flush	Div 16	Div 16	AV Plug Box	Mounts under table, verify location with architect.	120VAC 20A duplex, mounts inside floor pocket	No	Dedicated
Conference 362	FP-362-2	Ace 102BBXW	Floor	Flush	Div 16	Div 16	AV Plug Box	Mounts under table, verify location with architect.	120VAC 20A duplex, mounts inside floor pocket	No	Dedicated
Conference 362	IDF-362	NEMA Type 1 12Wx6Hx4D	+12" AFF	Flush	Div 16	Div 16	AV Equipment Plug Box		120VAC 20A Duplex	NA	Dedicated
Conference 362	LSJ-362	4S	Above accessible ceiling	Surface/Suspended	Div 16	Div 16	Loudspeaker Pull Box		NA	NA	NA
Conference 362	PP-362	NEMA Type 1 664	+18" AFF	Flush	Div 16	Div 16	AV Plug Box		120VAC 20A Duplex	No	Dedicated
Conference 362	VD-362	NEMA Type 1 444	+60" AFF	Flush	Div 16	Div 16	Video Display Plug Box		120VAC 20A Duplex	NA	Dedicated
Control 224	IDF-224	NEMA Type 1 12x12x4	+12" AFF	Flush	Div 16	Div 16	Data/Audio Patch Panel		NA	NA	NA
Control 241	IDF-241	NEMA Type 1 12x12x4	+12" AFF	Flush	Div 16	Div 16	Data/Audio Patch Panel		NA	NA	NA
Control 246	IDF-246	NEMA Type 1 12x12x4	+12" AFF	Flush	Div 16	Div 16	Data/Audio Patch Panel		NA	NA	NA
Control Room 141	AC-MDF	NEMA Type 1 664	+12" AFF	Surface	Div 16	Div 16	AV Power Feeder J-Box	Flex conduit from box directly to AV Racks, coordinate with AV Contractor.	120VAC 20A	NA	8 Dedicated
Control Room 141	MDF	NEMA Type 1, 2'x8'x6"	+8' AFF	Suspended	Div 16	Div 16	AV Raceway Pull Box	See detail	NA	NA	NA
Corridor 120	J-120	NEMA Type 1 664/as required	Above ceiling	Surface/Suspended	Div 16	Div 16	AV Pull Box	Mount in accessible LAT Ceiling	NA	NA	NA
Corridor 202	DS-202	4S w/2G trim	+60"	Flush	Div 16	Div 16	Digital Sign Plug Box		120VAC 20A Duplex	NA	DS2
Corridor 202	J-202	NEMA Type 1 884/as required	Above ceiling	Surface/Suspended	Div 16	Div 16	AV Pull Box	Mount in accessible LAT Ceiling	NA	NA	NA
Corridor 271	J-271	NEMA Type 1 664/as required	Above ceiling	Surface/Suspended	Div 16	Div 16	AV Pull Box	Mount in accessible LAT Ceiling	NA	NA	NA
Corridor 301	DS-301	4S w/2G trim	+60"	Flush	Div 16	Div 16	Digital Sign Plug Box		120VAC 20A Duplex	NA	DS4
Corridor 338	J-338	NEMA Type 1 664/as required	Above ceiling	Surface/Suspended	Div 16	Div 16	AV Pull Box	Mount in accessible LAT Ceiling	NA	NA	NA
Corridor 350	J-350	NEMA Type 1 884/as required	Above ceiling	Surface/Suspended	Div 16	Div 16	AV Pull Box	Mount in accessible LAT Ceiling	NA	NA	NA
Dean's Conference Room 336	CAM-336	4S w/2G trim	+52" AFF	Flush	Div 16	Div 16	Camera Plug Box	Mounts above VD box, verify location with consultant.	120VAC 20A Duplex	NA	C336
Dean's Conference Room 336	FP-336	Ace 102BBXW	Floor	Flush	Div 16	Div 16	AV Plug Box	Mounts under table, verify location with architect.	120VAC 20A duplex, mounts inside floor pocket	No	Dedicated
Dean's Conference Room 336	IDF-336	NEMA Type 1 12Wx6Hx4D	+12" AFF	Flush	Div 16	Div 16	AV Equipment Plug Box		120VAC 20A Duplex	NA	Dedicated
Dean's Conference Room 336	LSJ-336	4S	Above accessible ceiling	Surface/Suspended	Div 16	Div 16	Loudspeaker Pull Box		NA	NA	NA
Dean's Conference Room 336	PP-336	NEMA Type 1 664	+18" AFF	Flush	Div 16	Div 16	AV Plug Box		120VAC 20A Duplex	No	Dedicated
Dean's Conference Room 336	VD-336	NEMA Type 1 444	+60" AFF	Flush	Div 16	Div 16	Video Display Plug Box		120VAC 20A Duplex	NA	Dedicated
Faculty Lounge	IDF-351	NEMA Type 1 664	+12" AFF	Flush	Div 16	Div 16	AV Equipment Plug Box	Mount in millwork, verify location with architect	120VAC 20A Duplex	NA	Dedicated
Faculty Lounge 351	LSJ-351	4S	Above accessible ceiling	Surface/Suspended	Div 16	Div 16	Loudspeaker Pull Box		NA	NA	NA
Faculty Lounge 351	M-351	2G	+12" AFF	Flush	Div 16	Div 16	Microphone Plug Box		NA	NA	NA
Grants Management 278	FP-278	Ace 102BBXW	Floor	Flush	Div 16	Div 16	AV Plug Box	Mounts under table, verify location with architect.	120VAC 20A duplex, mounts inside floor pocket	No	CF278
Grants Management 278	PP-278	NEMA Type 1 664	+18" AFF	Flush	Div 16	Div 16	AV Plug Box		120VAC 20A Duplex	No	CF278
Grants Management 278	VD-278	NEMA Type 1 444	+60" AFF	Flush	Div 16	Div 16	Video Display Plug Box		120VAC 20A Duplex	NA	CF278
Grants Management Conf Room 278	LS-278	4S	Above accessible LAT ceiling	Surface/Suspended	Div 16	Div 16	Loudspeaker Pull Box		NA	NA	NA
Group Study 205	FP-205	Ace 102BBXW	Floor	Flush	Div 16	Div 16	AV Plug Box	Mounts under table, verify location with architect.	120VAC 20A duplex, mounts inside floor pocket	No	G205
Group Study 205	PP-205	NEMA Type 1 664	+18" AFF	Flush	Div 16	Div 16	AV Plug Box		120VAC 20A Duplex	No	G205
Group Study 205	VD-205	NEMA Type 1 444	+60" AFF	Flush	Div 16	Div 16	Video Display Plug Box		120VAC 20A Duplex	NA	G205
Group Study 206	FP-206	Ace 102BBXW	Floor	Flush	Div 16	Div 16	AV Plug Box	Mounts under table, verify location with architect.	120VAC 20A duplex, mounts inside floor pocket	No	G206
Group Study 206	PP-206	NEMA Type 1 664	+18" AFF	Flush	Div 16	Div 16	AV Plug Box		120VAC 20A Duplex	No	G206
Group Study 206	VD-206-1	NEMA Type 1 444	+60" AFF	Flush	Div 16	Div 16	Video Display Plug Box		120VAC 20A Duplex	NA	G206
Group Study 206	VD-206-2	NEMA Type 1 444	+60" AFF	Flush	Div 16	Div 16	Video Display Plug Box		120VAC 20A Duplex	NA	G206
Group Study 208	FP-208	Ace 102BBXW	Floor	Flush	Div 16	Div 16	AV Plug Box	Mounts under table, verify location with architect.	120VAC 20A duplex, mounts inside floor pocket	No	G208
Group Study 208	PP-208	NEMA TYpe 1 664	+18" AFF	Flush	Div 16	Div 16	AV Plug Box		120VAC 20A Duplex	No	G208
Group Study 208	VD-208	NEMA Type 1 444	+60" AFF	Flush	Div 16	Div 16	Video Display Plug Box		120VAC 20A Duplex	NA	G208
Group Study 209	FP-209	Ace 102BBXW	Floor	Flush	Div 16	Div 16	AV Plug Box	Mounts under table, verify location with architect.	120VAC 20A duplex, mounts inside floor pocket	No	G209
Group Study 209	PP-209	NEMA Type 1 664	+18" AFF	Flush	Div 16	Div 16	AV Plug Box		120VAC 20A Duplex	No	G209
Group Study 209	VD-209	NEMA Type 1 444	+60" AFF	Flush	Div 16	Div 16	Video Display Plug Box		120VAC 20A Duplex	NA	G209
Inpatient Suite 237	LC-234	2G	+12" AFF	Flush	Div 16	Div 16	Data/Audio Plug Box		NA	NA	NA
Inpatient Suite 237	LC-235	2G	+12" AFF	Flush	Div 16	Div 16	Data/Audio Plug Box		NA	NA	NA
Inpatient Suite 237	LC-236	2G	+12" AFF	Flush	Div 16	Div 16	Data/Audio Plug Box		NA	NA	NA
Inpatient Suite 237	LC-237	2G	+12" AFF	Flush	Div 16	Div 16	Data/Audio Plug Box		NA	NA	NA
Large Classroom 144	CAM-144-1	4S w/2G trim	+52" AFF	Flush	Div 16	Div 16	Camera Plug Box		120VAC 20A Duplex	NA	C144
Large Classroom 144	CAM-144-2	4S w/2G trim	+52" AFF	Flush	Div 16	Div 16	Camera Plug Box		120VAC 20A Duplex	NA	C144
Large Classroom 144	CAM-144-3	4S	Above ceiling	Suspended	Div 16	Div 16	Camera Plug Box	Coordinate with AV contractor, provide sleeve or bushing to penetrate LAT ceiling tile.	120VAC 20A, land direct to box	Yes	C144
Large Classroom 144	CR-144	FSR CB-22SP	Ceiling	Flush	Div 16	Div 16	Equipment Box		120VAC 20A, land direct to box	Yes	2 Dedicated
Large Classroom 144	FP-144-1	Ace 102BBXW	Floor	Flush	Div 16	Div 16	AV Floor Pocket	Duplex mounts inside floor pocket, coordinate with AV Contractor.	120VAC 20A Duplex	Yes	Dedicated
Large Classroom 144	FP-144-2	Ace 102BBXW	Floor	Flush	Div 16	Div 16	AV Floor Pocket	Duplex mounts inside floor pocket, coordinate with AV Contractor.	120VAC 20A Duplex	Yes	Dedicated
Large Classroom 144	IDF-144	NEMA Type 1 12Wx6Hx4D	+12" AFF	Flush	Div 16	Div 16	AV Equipment Plug Box		120VAC 20A Duplex	NA	Dedicated
Large Classroom 144	M-144	4S	Above ceiling	Surface/Suspended	Div 16	Div 16	Microphone Retractor Power Feeder		20A Duplex	NA	Dedicated
Large Classroom 144	SC-144	Draper Quote #507290-002	Ceiling	Flush	GC	GC	Motorized Screen Box	Conduit directly to case	120VAC 20A, direct conduit	NA	Dedicated
Large Classroom 144	VD-144-1	4S w/2G trim	+60"	Flush	Div 16	Div 16	Confidence Display		120VAC 20A Duplex	NA	V144
Large Classroom 144	VD-144-2	4S w/2G trim	+60"	Flush	Div 16	Div 16	Confidence Display		120VAC 20A Duplex	NA	V144
Large Classroom 144	VD-144-3	4S w/2G trim	+60"	Flush	Div 16	Div 16	Confidence Display		120VAC 20A Duplex	NA	V144
Large Classroom 145	CAM-145-1	4S w/2G trim	+52" AFF	Flush	Div 16	Div 16	Camera Plug Box		120VAC 20A Duplex	NA	C145
Large Classroom 145	CAM-145-2	4S w/2G trim	+52" AFF	Flush	Div 16	Div 16	Camera Plug Box		120VAC 20A Duplex	NA	C145
Large Classroom 145	CAM-145-3	4S w/2G trim	Above ceiling	Suspended	Div 16	Div 16	Camera Plug Box	Mount above ceiling, provide access hatch and sleeve to penetrate ceiling for cabling.	120VAC 20A Duplex	Yes	C145
Large Classroom 145	CAM-145-4	4S w/2G trim	+52" AFF	Flush	Div 16	Div 16	Camera Plug Box		120VAC 20A Duplex	NA	C145
Large Classroom 145	CR-145	FSR CB-22SP	Ceiling	Flush	Div 16	Div 16	Equipment Box		120VAC 20A, land direct to box	Yes	2 Dedicated
Large Classroom 145	FP-145	Ace 102BBXW	Floor	Flush	Div 16	Div 16	AV Floor Pocket	Duplex mounts inside floor pocket, coordinate with AV Contractor.	120VAC 20A Duplex	Yes	Dedicated
Large Classroom 145	IDF-145	NEMA Type 1 12Wx6Hx4D	+12" AFF	Flush	Div 16	Div 16	AV Equipment Plug Box		120VAC 20A Duplex	NA	Dedicated
Large Classroom 145	M-145	4S	Above ceiling	Surface/Suspended	Div 16	Div 16	Microphone Retractor Power Feeder		20A Duplex	NA	Dedicated
Large Classroom 145	PP-145-1	NEMA Type 1 664	+18" AFF	Flush	Div 16	Div 16	AV Plug Box		120VAC 20A Duplex	No	P145
Large Classroom 145	PP-145-2	NEMA Type 1 664	+18" AFF	Flush	Div 16	Div 16	AV Plug Box		120VAC 20A Duplex	No	P145
Large Classroom 145	SC-145	Draper Quote #507290-003	Ceiling	Flush	GC	GC	Motorized Screen Box	Conduit directly to case	120VAC 20A, direct conduit	NA	Dedicated
Large Classroom 145	VD-145-1	4S w/2G trim	Ceiling	Flush	Div 16	Div 16	Video Display Plug Box		120VAC 20A, land direct to box	Yes	V145
Large Classroom 145	VD-145-2	4S w/2G trim	Ceiling	Flush	Div 16	Div 16	Video Display Plug Box		120VAC 20A, land direct to box	Yes	V145
Large Classroom 146	CAM-146-1	4S w/2G trim	+52" AFF	Flush	Div 16	Div 16	Camera Plug Box		120VAC 20A Duplex	NA	C146
Large Classroom 146	CAM-146-3	4S w/2G trim	Above ceiling	Suspended	Div 16	Div 16	Camera Plug Box	Mount above ceiling, provide access hatch and sleeve to penetrate ceiling for cabling.	120VAC 20A Duplex	Yes	C146
Large Classroom 146	CAM-146-4	4S w/2G trim	+52" AFF	Flush	Div 16	Div 16	Camera Plug Box		120VAC 20A Duplex	NA	C145
Large Classroom 146	CR-146	FSR CB-22SP	Ceiling	Flush	Div 16	Div 16	Equipment Box		120VAC 20A, land direct to box	Yes	2 Dedicated
Large Classroom 146	FP-146	Ace 102BBXW	Floor	Flush	Div 16	Div 16	AV Floor Pocket	Duplex mounts inside floor pocket, coordinate with AV Contractor.	120VAC 20A Duplex	Yes	Dedicated
Large Classroom 146	IDF-146	NEMA Type 1 12Wx6Hx4D	+12" AFF	Flush	Div 16	Div 16	AV Equipment Plug Box		120VAC 20A Duplex	NA	Dedicated
Large Classroom 146	PP-146-1	NEMA Type 1 664	+18" AFF	Flush	Div 16	Div 16	AV Plug Box		120VAC 20A Duplex	No	P146
Large Classroom 146	PP-146-2	NEMA Type 1 664	+18" AFF	Flush	Div 16	Div 16	AV Plug Box		120VAC 20A Duplex	No	P146
Large Classroom 146	SC-146	Draper Quote #507290-003	Ceiling	Flush	GC	GC	Motorized Screen Box	Conduit directly to case	120VAC 20A, direct conduit	NA	Dedicated
Large Classroom 146	VD-146-1	4S w/2G trim	Ceiling	Flush	Div 16	Div 16	Video Display Plug Box		120VAC 20A, land direct to box	Yes	V146
Large Classroom 146	VD-146-2	4S w/2G trim	Ceiling	Flush	Div 16	Div 16	Video Display Plug Box		120VAC 20A, land direct to box	Yes	V146
Large Classroom 147	CAM-147-1	4S w/2G trim	+84" AFF	Flush	Div 16	Div 16	Camera Plug Box		120VAC 20A Duplex	NA	C147
Large Classroom 147	CAM-147-2	4S w/2G trim	+84" AFF	Flush	Div 16	Div 16	Camera Plug Box		120VAC 20A Duplex	NA	C147
Large Classroom 147	CAM-147-3	4S	Above ceiling	Suspended	Div 16	Div 16	Camera Plug Box	Coordinate with AV contractor, provide sleeve or bushing to penetrate LAT ceiling tile.	120VAC 20A, land direct to box	Yes	C147
Large Classroom 147	CR-147	FSR CB-22SP	Ceiling	Flush	Div 16	Div 16	Equipment Box		120VAC 20A, land direct to box	Yes	2 Dedicated
Large Classroom 147	FP-147-1	Ace 102BBXW	Floor	Flush	Div 16	Div 16	AV Floor Pocket	Duplex mounts inside floor pocket, coordinate with AV Contractor.	120VAC 20A Duplex	Yes	Dedicated
Large Classroom 147	FP-147-2	Ace 102BBXW	Floor	Flush	Div 16	Div 16	AV Floor Pocket	Duplex mounts inside floor pocket, coordinate with AV Contractor.	120VAC 20A Duplex	Yes	Dedicated
Large Classroom 147	IDF-147	NEMA Type 1 12Wx6Hx4D	+12" AFF	Flush	Div 16	Div 16	AV Equipment Plug Box		120VAC 20A Duplex	NA	Dedicated
Large Classroom 147	SC-147	Draper Quote #507290-002	Ceiling	Flush	GC	GC	Motorized Screen Box	Conduit directly to case	120VAC 20A, direct conduit	NA	Dedicated
Large Classroom 147	VD-147-1	4S w/2G trim	+60" AFF	Flush	Div 16	Div 16	Confidence Display		120VAC 20A Duplex	NA	V147
Large Classroom 147	VD-147-2	4S w/2G trim	+60" AFF	Flush	Div 16	Div 16	Confidence Display		120VAC 20A Duplex	NA	V147
Large Classroom 147	VD-147-3	4S w/2G trim	+60" AFF	Flush	Div 16	Div 16	Confidence Display		120VAC 20A Duplex	NA	V147
Lecture Hall 140	A-140	4S	+20' AFF	Surface/Suspended	Div 16	Div 16	Antenna Plug Box		NA	NA	NA
Lecture Hall 140	CAM-140-1	4S w/2G trim	+52" AFF	Flush	Div 16	Div 16	Camera Plug Box		120VAC 20A Duplex	NA	C140
Lecture Hall 140	CAM-140-2	4S w/2G trim	+52" AFF	Flush	Div 16	Div 16	Camera Plug Box		120VAC 20A Duplex	NA	C140
Lecture Hall 140	CAM-140-3	4S w/2G trim	Ceiling	Flush	Div 16	Div 16	Camera Plug Box		120VAC 20A Duplex	NA	C140
Lecture Hall 140	FP-140-1	Ace 104BBXW	Floor	Flush	Div 16	Div 16	AV Plug Box		120VAC 20A duplex, mounts inside floor pocket	No	Dedicated
Lecture Hall 140	FP-140-2	Ace 104BBXW	Floor	Flush	Div 16	Div 16	AV Plug Box		120VAC 20A duplex, mounts inside floor pocket	No	Dedicated
Lecture Hall 140	LS-140-1	4S	Exposed roof deck	Surface	Div 16	Div 16	Loudspeaker Pull Box		NA	NA	NA
Lecture Hall 140	LS-140-2	4S	Exposed roof deck	Surface	Div 16	Div 16	Loudspeaker Pull Box		NA	NA	NA
Lecture Hall 140	LS-140-3	4S	Exposed roof deck	Surface	Div 16	Div 16	Loudspeaker Pull Box		NA	NA	NA
Lecture Hall 140	LS-140-4	4S	Exposed roof deck	Surface	Div 16	Div 16	Loudspeaker Pull Box		NA	NA	NA
Lecture Hall 140	LS-140-5	4S	Exposed roof deck	Surface	Div 16	Div 16	Loudspeaker Pull Box		NA	NA	NA
Lecture Hall 140	LS-140-6	4S	Exposed roof deck	Surface	Div 16	Div 16	Loudspeaker Pull Box		NA	NA	NA
Lecture Hall 140	LS-140-7	4S	Exposed roof deck	Surface	Div 16	Div 16	Loudspeaker Pull Box		NA	NA	NA
Lecture Hall 140	LS-140-8	4S	Exposed roof deck	Surface	Div 16	Div 16	Loudspeaker Pull Box		NA	NA	NA
Lecture Hall 140	LS-140-9	4S	Exposed roof deck	Surface	Div 16	Div 16	Loudspeaker Pull Box		NA	NA	NA
Lecture Hall 140	LS-140-10	4S	Exposed roof deck	Surface	Div 16	Div 16	Loudspeaker Pull Box		NA	NA	NA
Lecture Hall 140	LS-140-11	4S	Exposed roof deck	Surface	Div 16	Div 16	Loudspeaker Pull Box		NA	NA	NA
Lecture Hall 140	LS-140-12	4S	Exposed roof deck	Surface	Div 16	Div 16	Loudspeaker Pull Box		NA	NA	NA
Lecture Hall 140	LS-140-13	4S	Exposed roof deck	Surface	Div 16	Div 16	Loudspeaker Pull Box		NA	NA	NA

CONTINUED: SEE SHEET AV 0.3

Electrical Distribution

1. All power systems should be provided as noted in Division 16 and the related electrical system drawings.
2. All receptacles 15A, U.O.N.
3. Do not combine AV conduits with power distribution systems.
4. Mount all power receptacles as shown on the plans, U.O.N.
5. Mounting height for AV receptacles are the same as the adjacent AV box, see backbox legend.
6. Receptacles shown or noted on AV drawings should be distributed from a transformer-isolated power transformer, see Div 16 one-line diagrams and panel schedules.
7. The AV power distribution transformer and service panel should be designated exclusively for AV use.
8. The AV power distribution transformer and service panel should be free from dimmable loads, motors and other noise-inducing circuits.
9. AV power noted on these sheets is for reference only. Refer to electrical power drawings for requirements.
10. All power systems should be sourced from separate transformer-isolated sub-panels.
11. The schedule includes a field for power circuiting. Locations of the same letter designator (T, C, V, etc.) may share a single circuit for the same physical room UON. Provide a single circuit where noted as "dedicated".
12. The schedule includes a field for power circuiting. Locations of the same designator may share a single circuit within the same room or location where permitted by loads. Provide a single circuit where noted as "dedicated".

Backboxes

1. All backbox locations shall be closely coordinated with AV (Div 11) prior to installation.
2. Backbox locations as shown on the plans are conceptual. Actual locations shall be closely coordinated with AV (Div 11) prior to installation.
3. Backbox locations as shown on the plans reflect recommended locations, verify all locations prior to rough-in.
4. Contractor shall verify all backbox locations with the Electrical Engineer or AV Consultant prior to installation.
5. Coordinate box locations with architect to avoid conflicts with architectural features.
6. If conflicts exist between conduit systems, contact the Electrical Engineer.
7. If conflicts exist between conduit systems, contact the AV Consultant.
8. NEMA backboxes designated for future use shall be installed with a blank oversized cover plate.
9. The Electrical Contractor shall verify and coordinate all AV backbox locations with the architect or AV Consultant prior to installation.
10. Power receptacles shall be located directly adjacent to AV backboxes U.O.N.
11. Refer to AV systems integration details for more information on backbox installation.
12. Boxes noted as "4S" are standard EO style, 4" Square Box, Welded, Metallic, 2-1/8" Deep (min., UON). Provide trim rings as noted for standard gang plates.

Conduit

1. All conduit indicated on risers or plans is .75" U.O.N.
2. All conduit shall be ferrous metal construction/EMT see Division 16.
3. All conduit, pull boxes, junction boxes and backboxes shall be installed under Division 16.
4. Conduits located in floor rigid galvanized type, UON, see Division 16.
5. Conduits shall be electrically isolated from AV equipment racks. Isolate service entrance to racks with nylon or plastic bushings, coordinate with AV contractor.
6. Do not combine AV conduits with power distribution systems.
7. Do not consolidate or combine AV cabling or conduits. Separate raceways are required for each circuit level as shown.
8. Install a single continuous pull string in each conduit.
9. Pull boxes shall be installed after each 270 degree bend. Pull boxes are not indicated on the plans.
10. PVC or plastic conduit is prohibited unless previously authorized by the AV Consultant.
11. Refer to architectural and/or electrical drawings for additional conduit installation requirements.

Wireways

1. All wireways and cable trays shall be supplied and installed under Division 16, if applicable.
2. All wireways shall be covered.
3. Cable trays and wireways shall include separate, isolated paths for signal cabling.
4. Coordinate actual wireway/tray paths with Electrical Engineer and AV Consultant.
5. Do not combine AV cabling circuits with power distribution conduits.
6. Refer to architectural drawings for additional information on tray routing and installation details.
7. Refer to AV equipment rack drawings for details on AV cabling and rack service entrance.

Owner Furnished Systems

1. Conduit requirements for systems by others are shown for this work only where specific integration is required.
2. Coordinate installation of conduit systems with those of owner-specified systems or systems by others. This includes, but is not limited to Telco, Data, LAN, CATV and other owner-provide systems or systems by others.
3. MDF/IDF locations include space for owner-furnished and future equipment.
4. Provide conduit landings as noted on the drawings.

Conduit Label Conventions

Box to Box Connection, without home run.	Box to Stub Up, Stub into accessible ceiling area UON.
Home Run, box to designated terminating point.	Number of conduits. Applies only in cases where multiple conduits are the same size.

Technical Systems Field Panel Symbol Legend

Symbol	Configuration
TL	Wall Box
FP	Floor Box
J-101	Ceiling Box

Signal Input — Divider Indicates Multiple Circuit Types
FP1 — Solid Fill Indicates Loudspeaker Level Circuit
Signal Output
Panel Designator

Gracenote Consulting, Inc.
Consultants in Acoustics & Audio Visual Technology

PO Box 3342
Meridian MS 39303

V: 601.207.0510
F: 601.500.5330

http://www.gracenoteconsulting.com

These drawings and their associated specifications, ideas, concepts, arrangements, designs and layouts are, and shall remain the property of the architect and consultant and no part thereof shall be copied, disclosed or distributed to any other party, or used in connection with any work or project other than the specific work as noted on these drawings without the express written permission of the consultant. Visual contact with these drawings or specifications or any other intellectual propery associated with the project shall constitute acceptance of this policy. © Copyright Gracenote Consulting, Inc.

STUDIO SOUTH
ARCHITECTS, PLLC

in association with
Eley Associates / Architects, P.A.

628 Washington Avenue, Suite C
Ocean Springs, MS 39564
228-762-8575 fax 769-9545

CONSULTANTS

STRUCTURAL
Structural Design Group
Contact: Thomas C. Schaeffer, P.E.
220 Great Circle Road Suite 106
Nashville, TN 37228
Tele: 615-255-5537

MECHANICAL
Eldridge & Associates, P.A.
Contact: Jimmy W. Eldridge, P.E.
604 HWY. 80 West Suite U
Clinton, MS
Tele: 601-925-5258

ELECTRICAL
Watkins & O'Gwynn
Contact: Holden O'Gwynn, Jr., P.E.
4523 Office Park Drive
Jackson, MS 39206
Tele: 601-982-3313

CIVIL
Ford Engineering Services, PLLC
Contact: Joel Ford
2010 Oak Grove Road
Building 4, Suite 1
Hattiesburg, MS 39402
Tele: 601-264-7296

PROFESSIONAL SEALS

PROJECT TITLE

GS# 108-261

School of Nursing Building

University of Southern Mississippi
(Institutions of Higher Learning)
Hattiesburg, MS

ISSUE

MARK	DATE	DESCRIPTION
	02-21-14	CONSTRUCTION DOCUMENTS
	10.1.15	Revised per owner's requirements
	12.1.15	AV Bid Documents
	4.4.16	AV Bid Documents Rev1

MANAGEMENT
PROJECT NO:
PROJECT AREA:
CAD DWG FILE:
DRAWN BY:
CHECKED BY:
SHEET TITLE

AV BACKBOX SCHEDULE
(1 of 2)

AV 0.2

FROM SHEET AV 0.2 (NOTE THAT SHEETS OVERLAP, DO NOT DUPLICATE DESIGNATORS)

Lecture Hall 140	LS-140-2	4S	Exposed roof deck	Surface	Div 16	Div 16	Loudspeaker Pull Box		NA	NA	NA
Lecture Hall 140	LS-140-3	4S	Exposed roof deck	Surface	Div 16	Div 16	Loudspeaker Pull Box		NA	NA	NA
Lecture Hall 140	LS-140-4	4S	Exposed roof deck	Surface	Div 16	Div 16	Loudspeaker Pull Box		NA	NA	NA
Lecture Hall 140	LS-140-5	4S	Exposed roof deck	Surface	Div 16	Div 16	Loudspeaker Pull Box		NA	NA	NA
Lecture Hall 140	LS-140-6	4S	Exposed roof deck	Surface	Div 16	Div 16	Loudspeaker Pull Box		NA	NA	NA
Lecture Hall 140	LS-140-7	4S	Exposed roof deck	Surface	Div 16	Div 16	Loudspeaker Pull Box		NA	NA	NA
Lecture Hall 140	LS-140-8	4S	Exposed roof deck	Surface	Div 16	Div 16	Loudspeaker Pull Box		NA	NA	NA
Lecture Hall 140	LS-140-9	4S	Exposed roof deck	Surface	Div 16	Div 16	Loudspeaker Pull Box		NA	NA	NA
Lecture Hall 140	LS-140-10	4S	Exposed roof deck	Surface	Div 16	Div 16	Loudspeaker Pull Box		NA	NA	NA
Lecture Hall 140	LS-140-11	4S	Exposed roof deck	Surface	Div 16	Div 16	Loudspeaker Pull Box		NA	NA	NA
Lecture Hall 140	LS-140-12	4S	Exposed roof deck	Surface	Div 16	Div 16	Loudspeaker Pull Box		NA	NA	NA
Lecture Hall 140	LS-140-13	4S	Exposed roof deck	Surface	Div 16	Div 16	Loudspeaker Pull Box		NA	NA	NA
Lecture Hall 140	M-140	4S	Above ceiling	Surface/Suspended	Div 16	Div 16	Microphone Retractor Power Feeder		20A Duplex	NA	Dedicated
Lecture Hall 140	MJ-140	NEMA Type 1 664	Above ceiling cloud	Surface, mount above ceiling cloud	Div 16	Div 16	Microphone Pull Box		NA	NA	NA
Lecture Hall 140	PRJ-140	4S	+20' AFF	Surface/Suspended	Div 16	Div 16	Projector Plug Box		120VAC 20A Duplex	NA	Dedicated
Lecture Hall 140	SC-140	Draper Quote #507290-001	Ceiling	Flush	GC	GC	Motorized Screen Box	Conduit directly to case	120VAC 20A, direct conduit	NA	Dedicated
Lecture Hall 140	TL-140-1	NEMA Type 1 664	+12" AFF	Flush	Div 16	Div 16	AV Patch/Plug Panel		120VAC 20A Duplex	NA	T140
Lecture Hall 140	TL-140-2	NEMA Type 1 664	+12" AFF	Flush	Div 16	Div 16	AV Patch/Plug Panel		120VAC 20A Duplex	NA	T140
Lecture Hall 140	VD-140	4S w/2G trim	Verify Site Conditions	Flush	Div 16	Div 16	Confidence Display	Verify location and mounting configuration on site.	120VAC 20A Duplex	NA	V140
Lobby 101	DS-101	4S w/2G trim	+60"	Flush	Div 16	Div 16	Digital Sign Plug Box		120VAC 20A Duplex	NA	DS1
Lobby 125	DS-125	4S w/2G trim	+60"	Flush	Div 16	Div 16	Digital Sign Plug Box		120VAC 20A Duplex	NA	DS1
Neonatal Specialty Unit 242	LC-242	2G	+12" AFF	Flush	Div 16	Div 16	Data/Audio Plug Box		NA	NA	NA
Nursing Skills Clinical Lab 233	LC-233-1	2G	+12" AFF	Flush	Div 16	Div 16	Data/Audio Plug Box		NA	NA	NA
Nursing Skills Clinical Lab 233	LC-233-2	2G	+12" AFF	Flush	Div 16	Div 16	Data/Audio Plug Box		NA	NA	NA
Nursing Skills Clinical Lab 233	LC-233-3	2G	+12" AFF	Flush	Div 16	Div 16	Data/Audio Plug Box		NA	NA	NA
Nursing Skills Clinical Lab 233	LC-233-4	2G	+12" AFF	Flush	Div 16	Div 16	Data/Audio Plug Box		NA	NA	NA
Nursing Skills Clinical Lab 233	LC-233-5	2G	+12" AFF	Flush	Div 16	Div 16	Data/Audio Plug Box		NA	NA	NA
Nursing Skills Clinical Lab 233	LC-233-6	2G	+12" AFF	Flush	Div 16	Div 16	Data/Audio Plug Box		NA	NA	NA
Nursing Skills Clinical Lab 233	LC-233-7	2G	+12" AFF	Flush	Div 16	Div 16	Data/Audio Plug Box		NA	NA	NA
Nursing Skills Clinical Lab 233	LC-233-8	2G	+12" AFF	Flush	Div 16	Div 16	Data/Audio Plug Box		NA	NA	NA
Nursing Skills Clinical Lab 244	LC-244-1	2G	+12" AFF	Flush	Div 16	Div 16	Data/Audio Plug Box		NA	NA	NA
Nursing Skills Clinical Lab 244	LC-244-2	2G	+12" AFF	Flush	Div 16	Div 16	Data/Audio Plug Box		NA	NA	NA
Nursing Skills Clinical Lab 244	LC-244-3	2G	+12" AFF	Flush	Div 16	Div 16	Data/Audio Plug Box		NA	NA	NA
Nursing Skills Clinical Lab 244	LC-244-4	2G	+12" AFF	Flush	Div 16	Div 16	Data/Audio Plug Box		NA	NA	NA
Nursing Skills Clinical Lab 244	LC-244-5	2G	+12" AFF	Flush	Div 16	Div 16	Data/Audio Plug Box		NA	NA	NA
Nursing Skills Clinical Lab 244	LC-244-6	2G	+12" AFF	Flush	Div 16	Div 16	Data/Audio Plug Box		NA	NA	NA
Nursing Skills Clinical Lab 244	LC-244-7	2G	+12" AFF	Flush	Div 16	Div 16	Data/Audio Plug Box		NA	NA	NA
Nursing Skills Clinical Lab 244	LC-244-8	2G	+12" AFF	Flush	Div 16	Div 16	Data/Audio Plug Box		NA	NA	NA
Nursing Skills Clinical Lab 244	LC-244-9	2G	+12" AFF	Flush	Div 16	Div 16	Data/Audio Plug Box		NA	NA	NA
Nursing Skills Clinical Lab 244	LC-244-10	2G	+12" AFF	Flush	Div 16	Div 16	Data/Audio Plug Box		NA	NA	NA
Nursing Skills Clinical Lab 244	LC-244-11	2G	+12" AFF	Flush	Div 16	Div 16	Data/Audio Plug Box		NA	NA	NA
Nursing Skills Clinical Lab 244	LC-244-12	2G	+12" AFF	Flush	Div 16	Div 16	Data/Audio Plug Box		NA	NA	NA
Operating Room 247	LC-247-1	2G	+12" AFF	Flush	Div 16	Div 16	Data/Audio Plug Box		NA	NA	NA
Operating Room 247	LC-247-2	2G	+12" AFF	Flush	Div 16	Div 16	Data/Audio Plug Box		NA	NA	NA
Operating Room 247	LC-247-3	2G	+12" AFF	Flush	Div 16	Div 16	Data/Audio Plug Box		NA	NA	NA
Operating Room 247	LC-247-4	2G	+12" AFF	Flush	Div 16	Div 16	Data/Audio Plug Box		NA	NA	NA
Pre/Post Lab 255	PP-255	4S w/2G trim	+18" AFF	Flush	Div 16	Div 16	AV Plug Box		120VAC 20A Duplex	No	P122
Pre/Post Lab 255	VD-255	4S w/2G trim	+60"	Flush	Div 16	Div 16	Confidence Display		120VAC 20A Duplex	NA	V122
Pre/Post Lab 256	PP-256	4S w/2G trim	+18" AFF	Flush	Div 16	Div 16	AV Plug Box		120VAC 20A Duplex	No	P122
Pre/Post Lab 256	VD-256	4S w/2G trim	+60"	Flush	Div 16	Div 16	Confidence Display		120VAC 20A Duplex	NA	V122
Pre/Post Lab 262	PP-262	4S w/2G trim	+18" AFF	Flush	Div 16	Div 16	AV Plug Box		120VAC 20A Duplex	No	P262/264
Pre/Post Lab 262	VD-262	4S w/2G trim	+60"	Flush	Div 16	Div 16	Confidence Display		120VAC 20A Duplex	NA	P262/264
Pre/Post Lab 264	PP-264	4S w/2G trim	+18" AFF	Flush	Div 16	Div 16	AV Plug Box		120VAC 20A Duplex	No	P262/264
Pre/Post Lab 264	VD-264	4S w/2G trim	+60"	Flush	Div 16	Div 16	Confidence Display		120VAC 20A Duplex	NA	P262/264
Reception 281	DS-281	4S w/2G trim	+60"	Flush	Div 16	Div 16	Digital Sign Plug Box		120VAC 20A Duplex	NA	DS3
Seminar 130	CR-130	FSR CB-22SP	Ceiling	Flush	Div 16	Div 16	Equipment Box		120VAC 20A, land direct to box	Yes	2 Dedicated
Seminar 130	FP-130	Ace 102BBXW	Floor	Flush	Div 16	Div 16	AV Floor Pocket	Duplex mounts inside floor pocket, coordinate with AV Contractor.	120VAC 20A Duplex	Yes	Dedicated
Seminar 130	IDF-130	NEMA Type 1 12Wx6Hx4D	+12" AFF	Flush	Div 16	Div 16	AV Equipment Plug Box		120VAC 20A Duplex	NA	Dedicated
Seminar 130	PP-130-1	NEMA Type 1 664	+18" AFF	Flush	Div 16	Div 16	AV Plug Box		120VAC 20A Duplex	No	P130
Seminar 130	PP-130-2	NEMA Type 1 664	+18" AFF	Flush	Div 16	Div 16	AV Plug Box		120VAC 20A Duplex	No	P130
Seminar 130	PP-130-3	4S w/2G trim	+18" AFF	Flush	Div 16	Div 16	AV Plug Box		120VAC 20A Duplex	No	P130
Seminar 130	PP-130-4	4S w/2G trim	+18" AFF	Flush	Div 16	Div 16	AV Plug Box		120VAC 20A Duplex	No	P130
Seminar 130	PP-130-5	4S w/2G trim	+18" AFF	Flush	Div 16	Div 16	AV Plug Box		120VAC 20A Duplex	No	P130
Seminar 130	SC-130	Draper Quote #507290-004	Ceiling	Flush	GC	GC	Motorized Screen Box	Conduit directly to case	120VAC 20A, direct conduit	NA	Dedicated
Seminar 130	VD-130-1	NEMA Type 1 444	+60" AFF	Flush	Div 16	Div 16	Video Display Plug Box		120VAC 20A Duplex	NA	V130
Seminar 130	VD-130-2	NEMA Type 1 444	+60" AFF	Flush	Div 16	Div 16	Video Display Plug Box		120VAC 20A Duplex	NA	V130
Seminar 130	VD-130-3	NEMA Type 1 444	+60" AFF	Flush	Div 16	Div 16	Video Display Plug Box		120VAC 20A Duplex	NA	V130
Seminar 134	CR-134	FSR CB-22SP	Ceiling	Flush	Div 16	Div 16	Equipment Box		120VAC 20A, land direct to box	Yes	2 Dedicated
Seminar 134	FP-134	Ace 102BBXW	Floor	Flush	Div 16	Div 16	AV Floor Pocket	Duplex mounts inside floor pocket, coordinate with AV Contractor.	120VAC 20A Duplex	Yes	Dedicated
Seminar 134	IDF-134	NEMA Type 1 12Wx6Hx4D	+12" AFF	Flush	Div 16	Div 16	AV Equipment Plug Box		120VAC 20A Duplex	NA	Dedicated
Seminar 134	PP-134-1	NEMA Type 1 664	+18" AFF	Flush	Div 16	Div 16	AV Plug Box		120VAC 20A Duplex	No	P134
Seminar 134	PP-134-2	NEMA Type 1 664	+18" AFF	Flush	Div 16	Div 16	AV Plug Box		120VAC 20A Duplex	No	P134
Seminar 134	SC-134	Draper Quote #507290-004	Ceiling	Flush	GC	GC	Motorized Screen Box	Conduit directly to case	120VAC 20A, direct conduit	NA	Dedicated
Seminar 372	CAM-372	4S w/2G trim	+52" AFF	Flush	Div 16	Div 16	Camera Plug Box	Mounts above VD box, verify location with consultant.	120VAC 20A Duplex	NA	C336
Seminar 372	FP-372-1	Ace 102BBXW	Floor	Flush	Div 16	Div 16	AV Plug Box	Mounts under table, verify location with architect.	120VAC 20A duplex, mounts inside floor pocket	No	Dedicated
Seminar 372	FP-372-2	Ace 102BBXW	Floor	Flush	Div 16	Div 16	AV Plug Box	Mounts under table, verify location with architect.	120VAC 20A duplex, mounts inside floor pocket	No	Dedicated
Seminar 372	IDF-372	NEMA Type 1 12Wx6Hx4D	+12" AFF	Flush	Div 16	Div 16	AV Equipment Plug Box		120VAC 20A Duplex	NA	Dedicated
Seminar 372	LSJ-372	4S	Above accessible ceiling	Surface/Suspended	Div 16	Div 16	Loudspeaker Pull Box		NA	NA	NA
Seminar 372	VD-372	NEMA Type 1 444	+60" AFF	Flush	Div 16	Div 16	Video Display Plug Box		120VAC 20A Duplex	NA	Dedicated
Semionar 372	PP-372	NEMA Type 1 664	+18" AFF	Flush	Div 16	Div 16	AV Plug Box		120VAC 20A Duplex	No	Dedicated
Specialized Lab 228	LC-228-1	2G	+12" AFF	Flush	Div 16	Div 16	Data/Audio Plug Box		NA	NA	NA
Specialized Lab 228	LC-228-2	2G	+12" AFF	Flush	Div 16	Div 16	Data/Audio Plug Box		NA	NA	NA
Specialized Lab 228	LC-228-3	2G	+12" AFF	Flush	Div 16	Div 16	Data/Audio Plug Box		NA	NA	NA
Standard Classroom 121	CR-121	FSR CB-22SP	Ceiling	Flush	Div 16	Div 16	Equipment Box		120VAC 20A, land direct to box	Yes	2 Dedicated
Standard Classroom 121	FP-121	Ace 102BBXW	Floor	Flush	Div 16	Div 16	AV Floor Pocket	Duplex mounts inside floor pocket, coordinate with AV Contractor.	120VAC 20A Duplex	Yes	Dedicated
Standard Classroom 121	IDF-121	NEMA Type 1 12Wx6Hx4D	+12" AFF	Flush	Div 16	Div 16	AV Equipment Plug Box		120VAC 20A Duplex	NA	Dedicated
Standard Classroom 121	M-121-2	4S	Above ceiling	Surface/Suspended	Div 16	Div 16	Microphone Retractor Power Feeder		20A Duplex	NA	Dedicated
Standard Classroom 121	PP-121-1	NEMA Type 1 664	+18" AFF	Flush	Div 16	Div 16	AV Plug Box		120VAC 20A Duplex	No	P121
Standard Classroom 121	PP-121-2	NEMA Type 1 664	+18" AFF	Flush	Div 16	Div 16	AV Plug Box		120VAC 20A Duplex	No	P121
Standard Classroom 121	SC-121	Draper Quote #507290-004	Ceiling	Flush	GC	GC	Motorized Screen Box	Conduit directly to case	120VAC 20A, direct conduit	NA	Dedicated
Standard Classroom 122	CAM-122-1	4S w/2G trim	+84" AFF	Flush	Div 16	Div 16	Camera Plug Box		120VAC 20A Duplex	NA	C121
Standard Classroom 122	CAM-122-2	4S w/2G trim	+84" AFF	Flush	Div 16	Div 16	Camera Plug Box		120VAC 20A Duplex	NA	C121
Standard Classroom 122	CAM-122-3	4S w/2G trim	+84" AFF	Flush	Div 16	Div 16	Camera Plug Box		120VAC 20A Duplex	NA	C121
Standard Classroom 122	CR-122-1	FSR CB-22SP	Ceiling	Flush	Div 16	Div 16	Equipment Box		120VAC 20A, land direct to box	Yes	2 Dedicated
Standard Classroom 122	CR-122-2	FSR CB-22SP	Ceiling	Flush	Div 16	Div 16	Equipment Box		120VAC 20A, land direct to box	Yes	2 Dedicated
Standard Classroom 122	FP-122-1	Ace 102BBXW	Floor	Flush	Div 16	Div 16	AV Floor Pocket	Duplex mounts inside floor pocket, coordinate with AV Contractor.	120VAC 20A Duplex	Yes	Dedicated
Standard Classroom 122	FP-122-2	Ace 102BBXW	Floor	Flush	Div 16	Div 16	AV Floor Pocket	Duplex mounts inside floor pocket, coordinate with AV Contractor.	120VAC 20A Duplex	Yes	Dedicated
Standard Classroom 122	IDF-122	NEMA Type 1 12Wx6Hx4D	+12" AFF	Flush	Div 16	Div 16	AV Equipment Plug Box		120VAC 20A Duplex	NA	Dedicated
Standard Classroom 122	M-122-1	4S	Above ceiling	Surface/Suspended	Div 16	Div 16	Microphone Retractor Power Feeder		20A Duplex	NA	Dedicated
Standard Classroom 122	PP-122-1	NEMA Type 1 664	+18" AFF	Flush	Div 16	Div 16	AV Plug Box		120VAC 20A Duplex	No	P122
Standard Classroom 122	PP-122-2	NEMA Type 1 664	+18" AFF	Flush	Div 16	Div 16	AV Plug Box		120VAC 20A Duplex	No	P122
Standard Classroom 122	PP-122-3	4S w/2G trim	+18" AFF	Flush	Div 16	Div 16	AV Plug Box		120VAC 20A Duplex	No	P122
Standard Classroom 122	PP-122-4	4S w/2G trim	+18" AFF	Flush	Div 16	Div 16	AV Plug Box		120VAC 20A Duplex	No	P122
Standard Classroom 122	PP-122-5	4S w/2G trim	+18" AFF	Flush	Div 16	Div 16	AV Plug Box		120VAC 20A Duplex	No	P122
Standard Classroom 122	SC-122-1	Draper Quote #507290-004	Ceiling	Flush	GC	GC	Motorized Screen Box	Conduit directly to case	120VAC 20A, direct conduit	NA	Dedicated
Standard Classroom 122	SC-122-2	Draper Quote #507290-004	Ceiling	Flush	GC	GC	Motorized Screen Box	Conduit directly to case	120VAC 20A, direct conduit	NA	Dedicated
Standard Classroom 122	VD-122-1	4S w/2G trim	+60" AFF	Flush	Div 16	Div 16	Confidence Display		120VAC 20A Duplex	NA	V122
Standard Classroom 122	VD-122-2	4S w/2G trim	+60" AFF	Flush	Div 16	Div 16	Confidence Display		120VAC 20A Duplex	NA	V122
Standard Classroom 122	VD-122-3	4S w/2G trim	+60" AFF	Flush	Div 16	Div 16	Confidence Display		120VAC 20A Duplex	NA	V122
Standard Classroom 124	CR-124-1	FSR CB-22SP	Ceiling	Flush	Div 16	Div 16	Equipment Box		120VAC 20A, land direct to box	Yes	2 Dedicated
Standard Classroom 124	FP-124	Ace 102BBXW	Floor	Flush	Div 16	Div 16	AV Floor Pocket	Duplex mounts inside floor pocket, coordinate with AV Contractor.	120VAC 20A Duplex	Yes	Dedicated
Standard Classroom 124	IDF-124	NEMA Type 1 12Wx6Hx4D	+12" AFF	Flush	Div 16	Div 16	AV Equipment Plug Box		120VAC 20A Duplex	NA	Dedicated
Standard Classroom 124	M-124	4S	Above ceiling	Surface/Suspended	Div 16	Div 16	Microphone Retractor Power Feeder		20A Duplex	NA	Dedicated
Standard Classroom 124	PP-124-1	NEMA Type 1 664	+18" AFF	Flush	Div 16	Div 16	AV Plug Box		120VAC 20A Duplex	No	P124
Standard Classroom 124	PP-124-2	NEMA Type 1 664	+18" AFF	Flush	Div 16	Div 16	AV Plug Box		120VAC 20A Duplex	No	P124
Standard Classroom 124	SC-124-1	Draper Quote #507290-004	Ceiling	Flush	GC	GC	Motorized Screen Box	Conduit directly to case	120VAC 20A, direct conduit	NA	Dedicated
Student Lounge 291	DS-291-1	4S w/2G trim	+60"	Flush	Div 16	Div 16	Digital Sign Plug Box		120VAC 20A Duplex	NA	DS4
Student Lounge 291	DS-291-2	4S w/2G trim	+60"	Flush	Div 16	Div 16	Digital Sign Plug Box		120VAC 20A Duplex	NA	DS4
Student Lounge 291	LS-291	4S	Above accessible LAT ceiling	Surface/Suspended	Div 16	Div 16	Loudspeaker Pull Box		NA	NA	NA
Terrace 300	LS-300-1	1G, weather resistant type	+6' AFF	Flush	Div 16	Div 16	Loudspeaker Plug Box		NA	NA	NA
Terrace 300	LS-300-2	1G, weather resistant type	+6' AFF	Flush	Div 16	Div 16	Loudspeaker Plug Box		NA	NA	NA
Terrace 300	LS-300-3	1G, weather resistant type	+6' AFF	Flush	Div 16	Div 16	Loudspeaker Plug Box		NA	NA	NA
Terrace 300	LS-300-4	1G, weather resistant type	+6' AFF	Flush	Div 16	Div 16	Loudspeaker Plug Box		NA	NA	NA
Terrace 300	LS-300-5	1G, weather resistant type	+6' AFF	Flush	Div 16	Div 16	Loudspeaker Plug Box		NA	NA	NA
Terrace 300	LSJ-300	4S, weather resistant type	Above accessible ceiling	Surface/Suspended	Div 16	Div 16	Loudspeaker Pull Box		NA	NA	NA
Terrace 300	M-300	2G, weather resistant type	+12" AFF	Flush	Div 16	Div 16	Microphone Plug Box		NA	NA	NA
Vestibule 116	DS-116	4S w/2G trim	+60"	Flush	Div 16	Div 16	Digital Sign Plug Box		120VAC 20A Duplex	NA	DS1

STUDIO SOUTH
ARCHITECTS, PLLC

in association with
Eley Associates / Architects, P.A.

628 Washington Avenue, Suite C
Ocean Springs, MS 39564
228-762-8575 fax 769-9545

CONSULTANTS

STRUCTURAL

Structural Design Group
Contact: Thomas C. Schaeffer, P.E.
220 Great Circle Road Suite 106
Nashville, TN 37228
Tele: 615-255-5537

MECHANICAL

Eldridge & Associates, P.A.
Contact: Jimmy W. Eldridge, P.E.
604 HWY. 80 West Suite U
Clinton, MS
Tele: 601-925-5258

ELECTRICAL

Watkins & O'Gwynn
Contact: Holden O'Gwynn, Jr., P.E.
4523 Office Park Drive
Jackson, MS 39206
Tele: 601-982-3313

CIVIL

Ford Engineering Services, PLLC
Contact: Joel Ford
2010 Oak Grove Road
Building 4, Suite 1
Hattiesburg, MS 39402
Tele: 601-264-7296

PROFESSIONAL SEALS

PROJECT TITLE

GS# 108-261

School of Nursing Building

University of Southern Mississippi
(Institutions of Higher Learning)
Hattiesburg, MS

ISSUE

MARK	DATE	DESCRIPTION
	02-21-14	CONSTRUCTION DOCUMENTS
	10.1.15	Revised per owner's requirements
	12.1.15	AV Bid Documents
	4.4.16	AV Bid Documents Rev1

MANAGEMENT

PROJECT NO:
PROJECT AREA:
CAD DWG FILE:
DRAWN BY:
CHECKED BY:

SHEET TITLE

AV BACKBOX SCHEDULE (2 of 2)

AV 0.3

Gracenote Consulting, Inc.
Consultants in Acoustics & Audio Visual Technology

PO Box 3342
Meridian MS 39303

V: 601.207.0510
F: 601.500.5330

http://www.gracenoteconsulting.com

These drawings and their associated specifications, ideas, concepts, arrangements, designs and layouts are, and shall remain the property of the architect and consultant and no part thereof shall be copied, disclosed or distributed to any other party, or used in connection with any work or project other than the specific work as noted on these drawings without the express written permission of the consultant. Visual contact with these drawings or specifications or any other intellectual propery associated with the project shall constitute acceptance of this policy. © Copyright Gracenote Consulting, Inc.

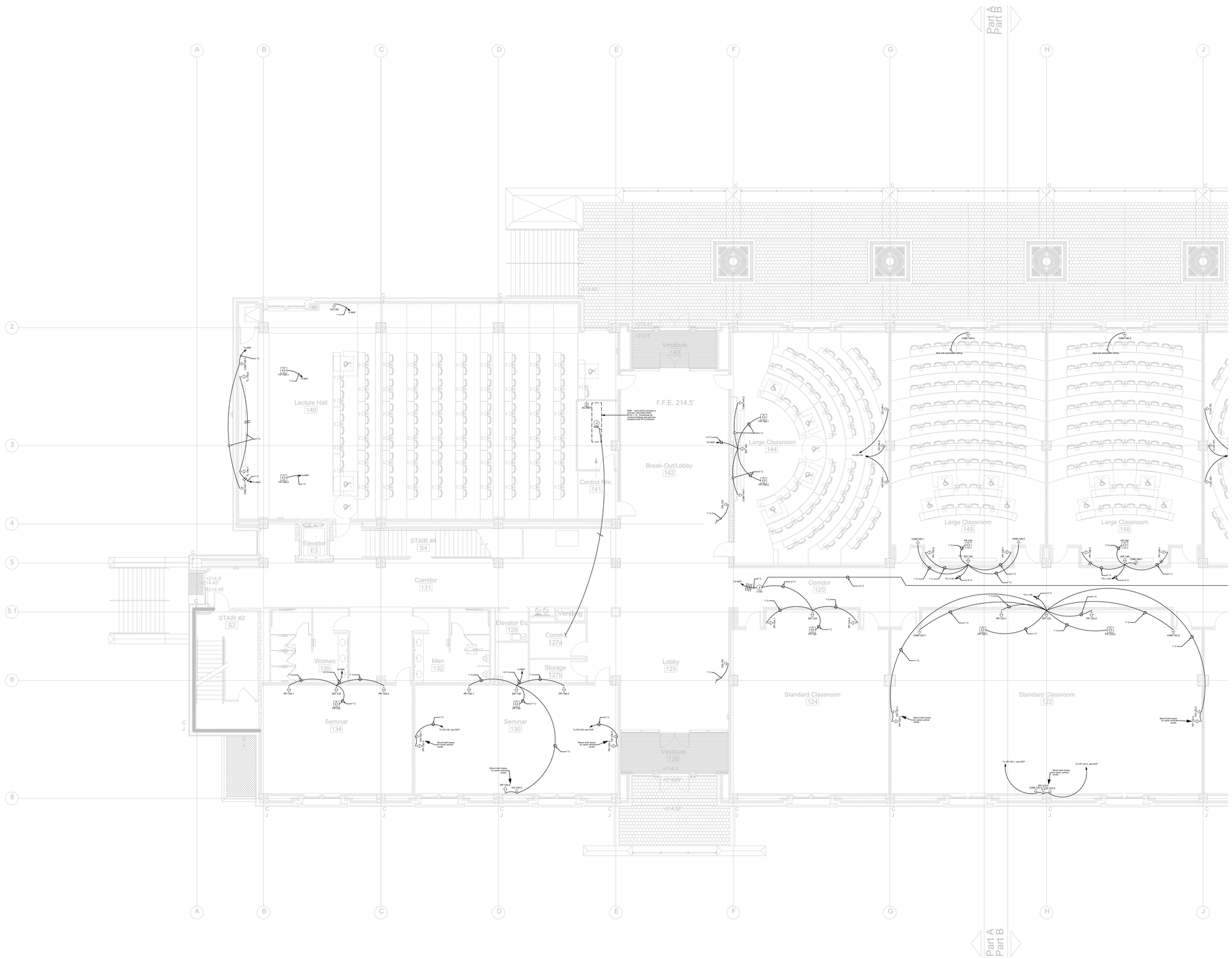

STUDIO SOUTH
ARCHITECTS, PLLC

in association with

Eley Associates / Architects, P.A.

628 Washington Avenue, Suite C
Ocean Springs, MS 39564
228-762-8575 fax 769-9545

CONSULTANTS

STRUCTURAL

Structural Design Group
Contact: Thomas C. Schaeffer, P.E.
220 Great Circle Road Suite 106
Nashville, TN 37228
Tele: 615-255-5537

MECHANICAL

Eldridge & Associates, P.A.
Contact: Jimmy W. Eldridge, P.E.
604 HWY. 80 West Suite U
Clinton, MS
Tele: 601-925-5258

ELECTRICAL

Watkins & O'Gwynn
Contact: Holden O'Gwynn, Jr., P.E.
4523 Office Park Drive
Jackson, MS 39206
Tele: 601-982-3313

CIVIL

Ford Engineering Services, PLLC
Contact: Joel Ford
2010 Oak Grove Road
Building 4, Suite 1
Hattiesburg, MS 39402
Tele: 601-264-7296

PROFESSIONAL SEALS

PROJECT TITLE

GS# 108-261

School of Nursing Building

University of Southern Mississippi
(Institutions of Higher Learning)
Hattiesburg, MS

ISSUE

MARK	DATE	DESCRIPTION
	02-21-14	CONSTRUCTION DOCUMENTS
	10.1.15	Revised per owner's requirements
	12.1.15	AV Bid Documents
	4.4.16	AV Bid Documents Rev1

MANAGEMENT

PROJECT NO:
PROJECT AREA:
CAD DWG FILE:
DRAWN BY:
CHECKED BY:

SHEET TITLE

FIRST FLOOR AV RACEWAY PLAN PART A

AV 1.1

Gracenote Consulting, Inc.
Consultants in Acoustics & Audio Visual Technology

PO Box 3342
Meridian MS 39303

V: 601.207.0510
F: 601.500.5330

http://www.gracenoteconsulting.com

These drawings and their associated specifications, ideas, concepts, arrangements, designs and layouts are, and shall remain the property of the architect and consultant and no part thereof shall be copied, disclosed or distributed to any other party, or used in connection with any work or project other than the specific work as noted on these drawings without the express written permission of the consultant. Visual contact with these drawings or specifications or any other intellectual propery associated with the project shall constitute acceptance of this policy. © Copyright Gracenote Consulting, Inc.

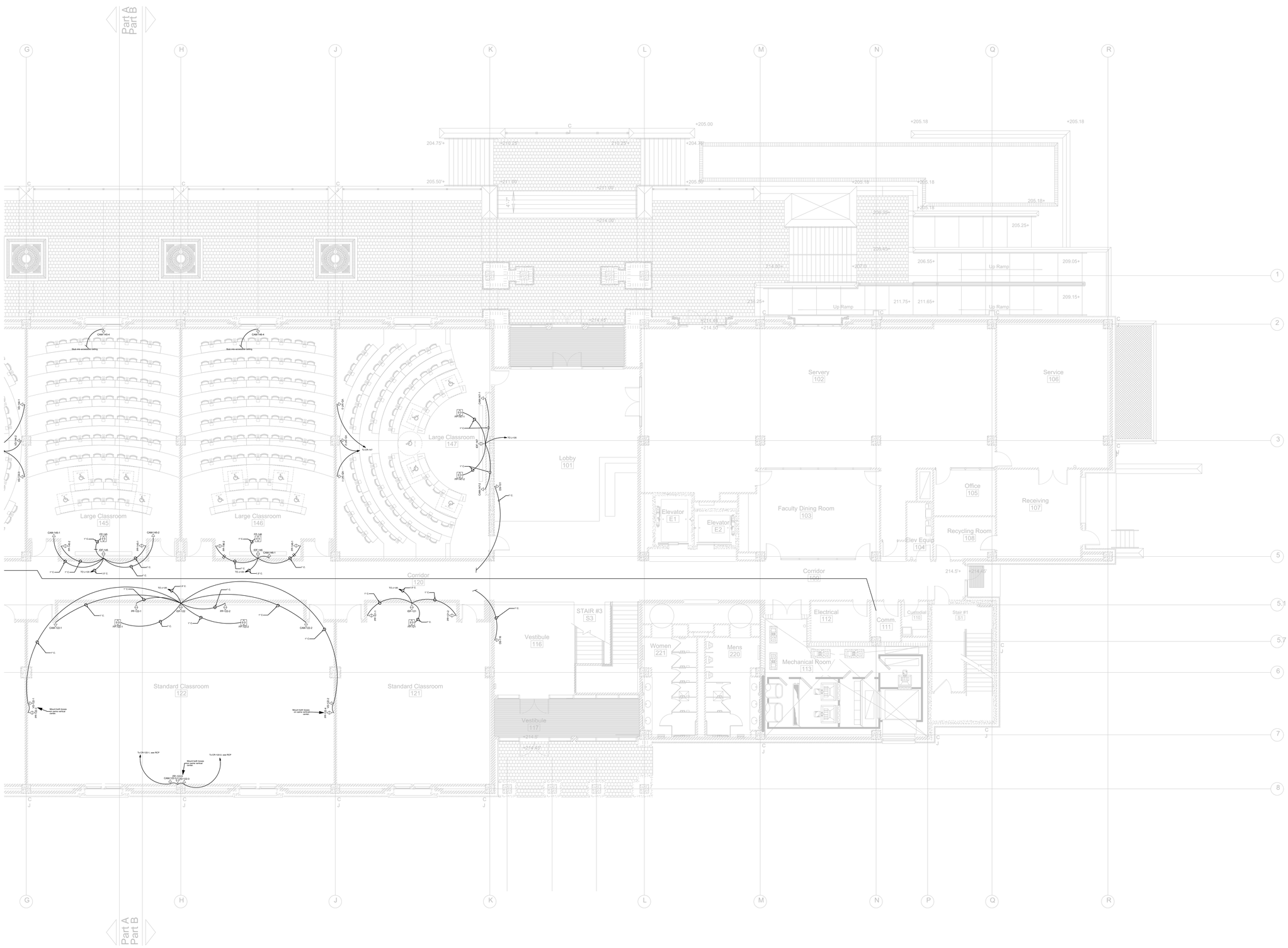

STUDIO SOUTH
ARCHITECTS, PLLC

in association with

Eley Associates / Architects, P.A.

628 Washington Avenue, Suite C
Ocean Springs, MS 39564
228-762-8575 fax 769-9545

CONSULTANTS

STRUCTURAL

Structural Design Group
Contact: Thomas C. Schaeffer, P.E.
220 Great Circle Road Suite 106
Nashville, TN 37228
Tele: 615-255-5537

MECHANICAL

Eldridge & Associates, P.A.
Contact: Jimmy W. Eldridge, P.E.
604 HWY. 80 West Suite U
Clinton, MS
Tele: 601-925-5258

ELECTRICAL

Watkins & O'Gwynn
Contact: Holden O'Gwynn, Jr., P.E.
4523 Office Park Drive
Jackson, MS 39206
Tele: 601-982-3313

CIVIL

Ford Engineering Services, PLLC
Contact: Joel Ford
2010 Oak Grove Road
Building 4, Suite 1
Hattiesburg, MS 39402
Tele: 601-264-7296

PROFESSIONAL SEALS

PROJECT TITLE

GS# 108-261

School of Nursing Building

University of Southern Mississippi
(Institutions of Higher Learning)
Hattiesburg, MS

ISSUE

MARK	DATE	DESCRIPTION
	02-21-14	CONSTRUCTION DOCUMENTS
	10.1.15	Revised per owner's requirements
	12.1.15	AV Bid Documents
	4.4.16	AV Bid Documents Rev1

MANAGEMENT

PROJECT NO:
PROJECT AREA:
CAD DWG FILE:
DRAWN BY:
CHECKED BY:

SHEET TITLE

FIRST FLOOR
AV RACEWAY PLAN
PART B

AV 1.2

Gracenote Consulting, Inc.
Consultants in Acoustics & Audio Visual Technology

PO Box 3342
Meridian MS 39303

V: 601.207.0510
F: 601.500.5330

http://www.gracenoteconsulting.com

These drawings and their associated specifications, ideas, concepts, arrangements, designs and layouts are, and shall remain the property of the architect and consultant and no part thereof shall be copied, disclosed or distributed to any other party, or used in connection with any work or project other than the specific work as noted on these drawings without the express written permission of the consultant. Visual contact with these drawings or specifications or any other intellectual propery associated with the project shall constitute acceptance of this policy. © Copyright Gracenote Consulting, Inc.

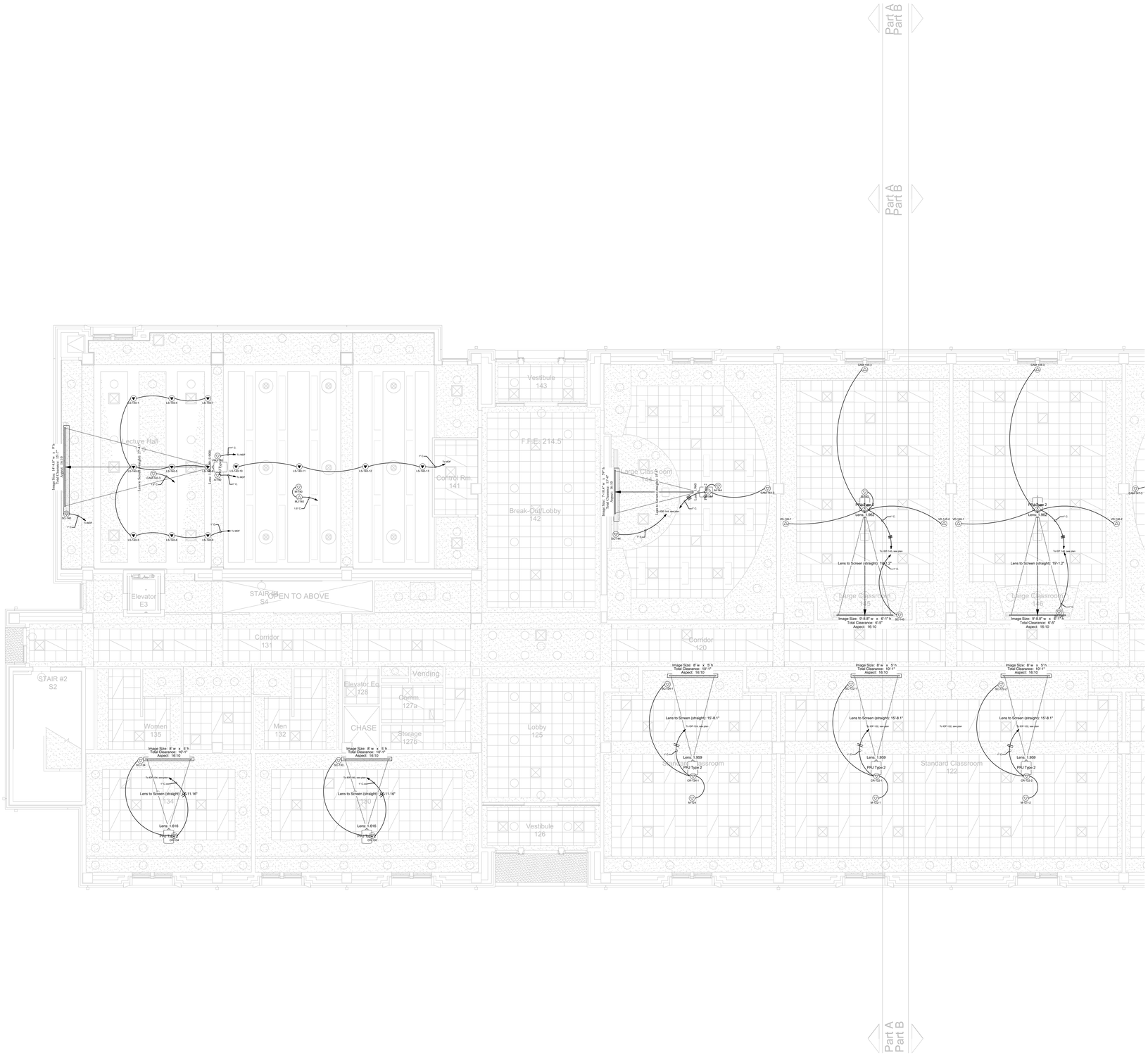

Gracenote Consulting, Inc.
Consultants in Acoustics & Audio Visual Technology

PO Box 3342
Meridian MS 39303

V: 601.207.0510
F: 601.500.5330

http://www.gracenoteconsulting.com

These drawings and their associated specifications, ideas, concepts, arrangements, designs and layouts are, and shall remain the property of the architect and consultant and no part thereof shall be copied, disclosed or distributed to any other party, or used in connection with any work or project other than the specific work as noted on these drawings without the express written permission of the consultant. Visual contact with these drawings or specifications or any other intellectual propery associated with the project shall constitute acceptance of this policy. © Copyright Gracenote Consulting, Inc.

STUDIO SOUTH
ARCHITECTS, PLLC

in association with

Eley Associates / Architects, P.A.

628 Washington Avenue, Suite C
Ocean Springs, MS 39564
228-762-8575 fax 769-9545

CONSULTANTS

STRUCTURAL

Structural Design Group
Contact: Thomas C. Schaeffer, P.E.
220 Great Circle Road Suite 106
Nashville, TN 37228
Tele: 615-255-5537

MECHANICAL

Eldridge & Associates, P.A.
Contact: Jimmy W. Eldridge, P.E.
604 HWY. 80 West Suite U
Clinton, MS
Tele: 601-925-5258

ELECTRICAL

Watkins & O'Gwynn
Contact: Holden O'Gwynn, Jr., P.E.
4523 Office Park Drive
Jackson, MS 39206
Tele: 601-982-3313

CIVIL

Ford Engineering Services, PLLC
Contact: Joel Ford
2010 Oak Grove Road
Building 4, Suite 1
Hattiesburg, MS 39402
Tele: 601-264-7296

PROFESSIONAL SEALS

PROJECT TITLE

GS# 108-261

School of Nursing Building

University of Southern Mississippi
(Institutions of Higher Learning)
Hattiesburg, MS

ISSUE

MARK	DATE	DESCRIPTION
	02-21-14	CONSTRUCTION DOCUMENTS
	10.1.15	Revised per owner's requirements
	12.1.15	AV Bid Documents
	4.4.16	AV Bid Documents Rev1

MANAGEMENT

PROJECT NO:
PROJECT AREA:
CAD DWG FILE:
DRAWN BY:
CHECKED BY:

SHEET TITLE

FIRST FLOOR
AV RACEWAY
REFLECTED CEILING
PLAN
PART A

AV 1.3

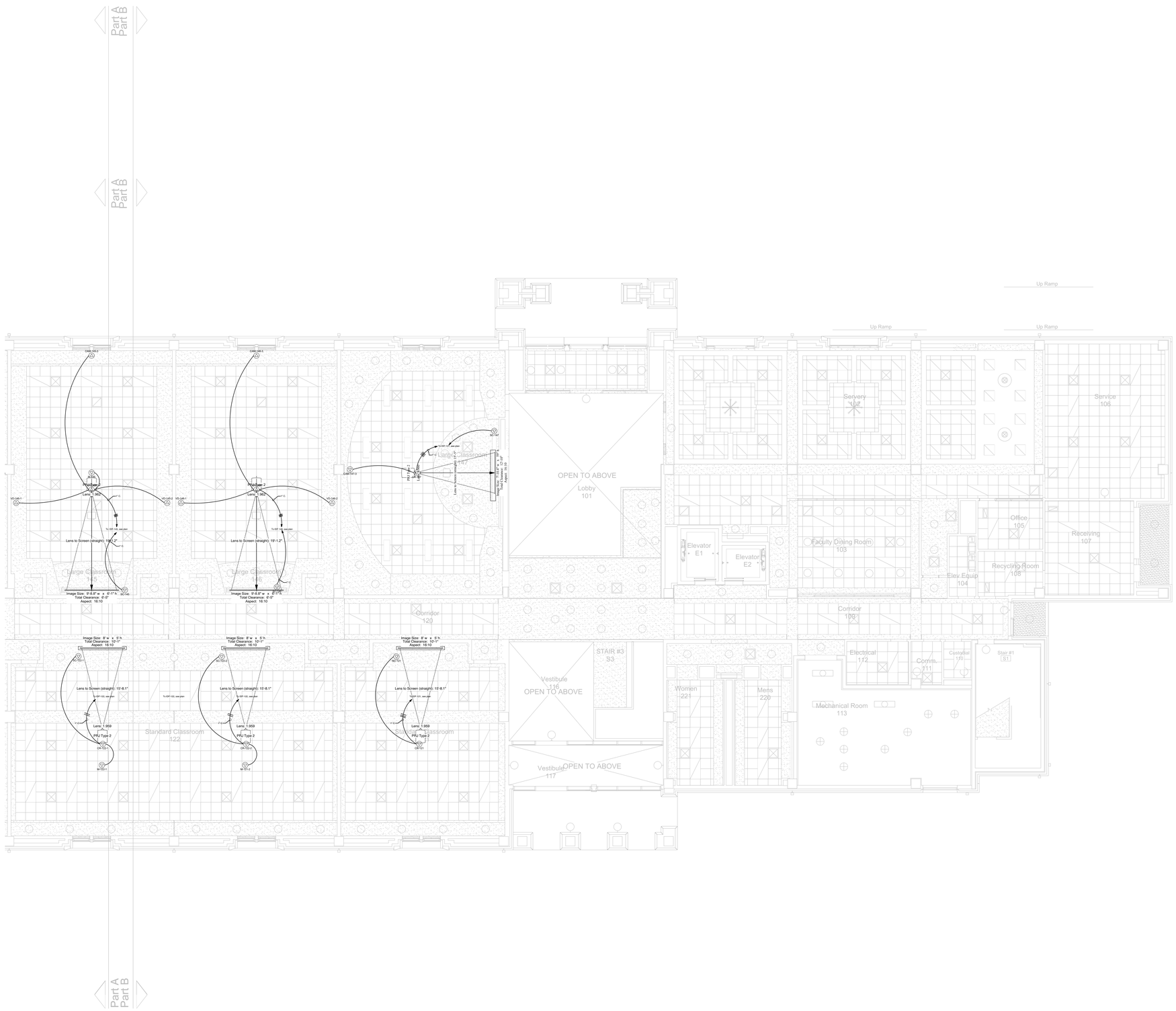

STUDIO SOUTH
ARCHITECTS, PLLC

in association with

Eley Associates / Architects, P.A.

628 Washington Avenue, Suite C
Ocean Springs, MS 39564
228-762-8575 fax 769-9545

CONSULTANTS

STRUCTURAL

Structural Design Group
Contact: Thomas C. Schaeffer, P.E.
220 Great Circle Road Suite 106
Nashville, TN 37228
Tele: 615-255-5537

MECHANICAL

Eldridge & Associates, P.A.
Contact: Jimmy W. Eldridge, P.E.
604 HWY. 80 West Suite U
Clinton, MS
Tele: 601-925-5258

ELECTRICAL

Watkins & O'Gwynn
Contact: Holden O'Gwynn, Jr., P.E.
4523 Office Park Drive
Jackson, MS 39206
Tele: 601-982-3313

CIVIL

Ford Engineering Services, PLLC
Contact: Joel Ford
2010 Oak Grove Road
Building 4, Suite 1
Hattiesburg, MS 39402
Tele: 601-264-7296

PROFESSIONAL SEALS

PROJECT TITLE

GS# 108-261

School of Nursing Building

University of Southern Mississippi
(Institutions of Higher Learning)
Hattiesburg, MS

ISSUE

MARK	DATE	DESCRIPTION
	02-21-14	CONSTRUCTION DOCUMENTS
	10.1.15	Revised per owner's requirements
	12.1.15	AV Bid Documents
	4.4.16	AV Bid Documents Rev1

MANAGEMENT

PROJECT NO:
PROJECT AREA:
CAD DWG FILE:
DRAWN BY:
CHECKED BY:

SHEET TITLE

FIRST FLOOR
AV RACEWAY
REFLECTED CEILING
PLAN
PART B

AV 1.4

Gracenote Consulting, Inc.
Consultants in Acoustics & Audio Visual Technology

PO Box 3342
Meridian MS 39303

V: 601.207.0510
F: 601.500.5330

http://www.gracenoteconsulting.com

These drawings and their associated specifications, ideas, concepts, arrangements, designs and layouts are, and shall remain the property of the architect and consultant and no part thereof shall be copied, disclosed or distributed to any other party, or used in connection with any work or project other than the specific work as noted on these drawings without the express written permission of the consultant. Visual contact with these drawings or specifications or any other intellectual propery associated with the project shall constitute acceptance of this policy. © Copyright Gracenote Consulting, Inc.

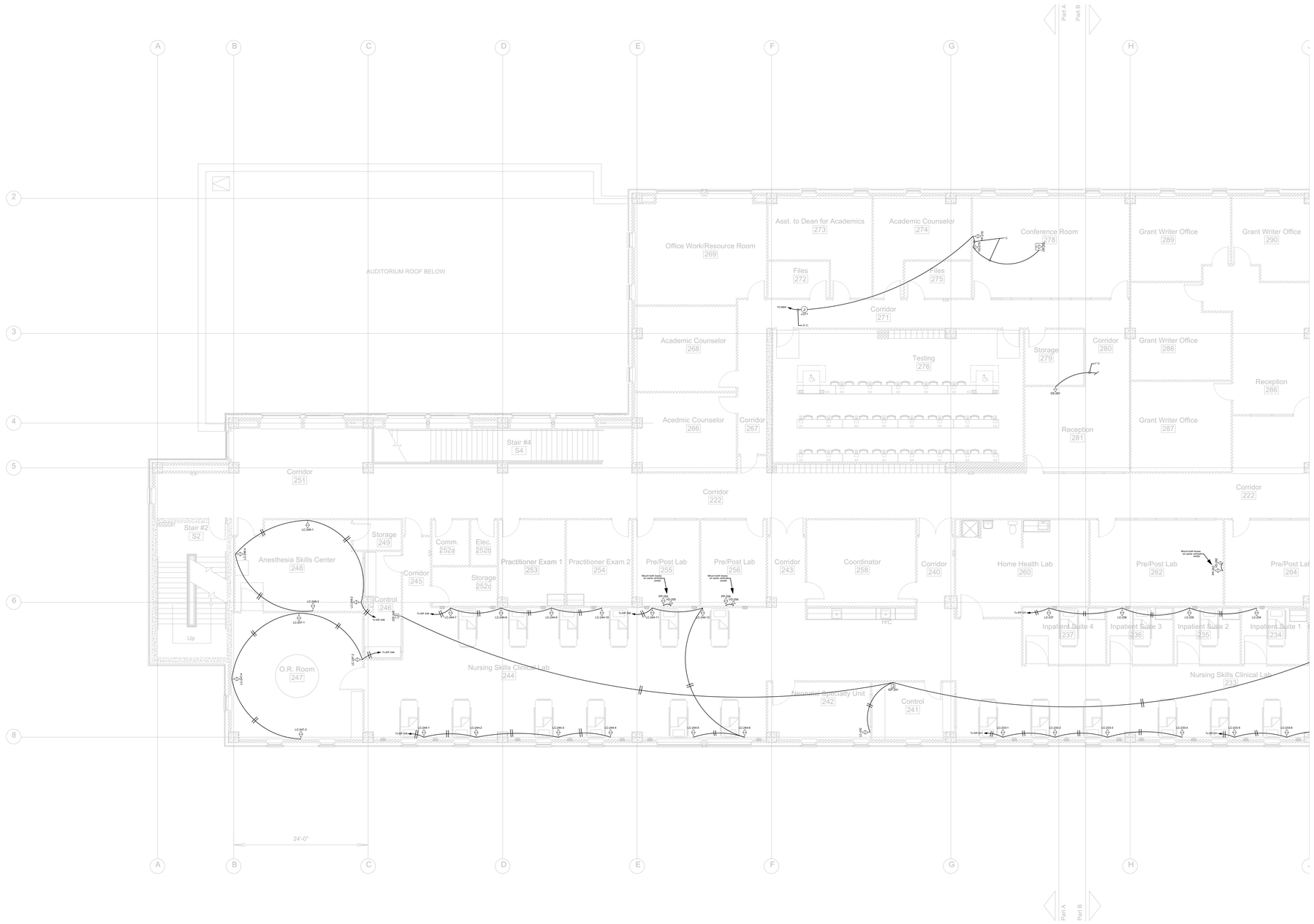

STUDIO SOUTH
ARCHITECTS, PLLC

in association with

Eley Associates / Architects, P.A.

628 Washington Avenue, Suite C
Ocean Springs, MS 39564
228-762-8575 fax 769-9545

CONSULTANTS

STRUCTURAL

Structural Design Group
Contact: Thomas C. Schaeffer, P.E.
220 Great Circle Road Suite 106
Nashville, TN 37228
Tele: 615-255-5537

MECHANICAL

Eldridge & Associates, P.A.
Contact: Jimmy W. Eldridge, P.E.
604 HWY. 80 West Suite U
Clinton, MS
Tele: 601-925-5258

ELECTRICAL

Watkins & O'Gwynn
Contact: Holden O'Gwynn, Jr., P.E.
4523 Office Park Drive
Jackson, MS 39206
Tele: 601-982-3313

CIVIL

Ford Engineering Services, PLLC
Contact: Joel Ford
2010 Oak Grove Road
Building 4, Suite 1
Hattiesburg, MS 39402
Tele: 601-264-7296

PROFESSIONAL SEALS

PROJECT TITLE

GS# 108-261

School of Nursing Building

University of Southern Mississippi
(Institutions of Higher Learning)
Hattiesburg, MS

ISSUE

MARK	DATE	DESCRIPTION
	02-21-14	CONSTRUCTION DOCUMENTS
	10.1.15	Revised per owner's requirements
	12.1.15	AV Bid Documents
	4.4.16	AV Bid Documents Rev1

MANAGEMENT

PROJECT NO:
PROJECT AREA:
CAD DWG FILE:
DRAWN BY:
CHECKED BY:

SHEET TITLE

SECOND FLOOR
AV RACEWAY PLAN
PART A

AV 1.5

Gracenote Consulting, Inc.
Consultants in Acoustics & Audio Visual Technology

PO Box 3342
Meridian MS 39303

V: 601.207.0510
F: 601.500.5330

http://www.gracenoteconsulting.com

These drawings and their associated specifications, ideas, concepts, arrangements, designs and layouts are, and shall remain the property of the architect and consultant and no part thereof shall be copied, disclosed or distributed to any other party, or used in connection with any work or project other than the specific work as noted on these drawings without the express written permission of the consultant. Visual contact with these drawings or specifications or any other intellectual propery associated with the project shall constitute acceptance of this policy. © Copyright Gracenote Consulting, Inc.

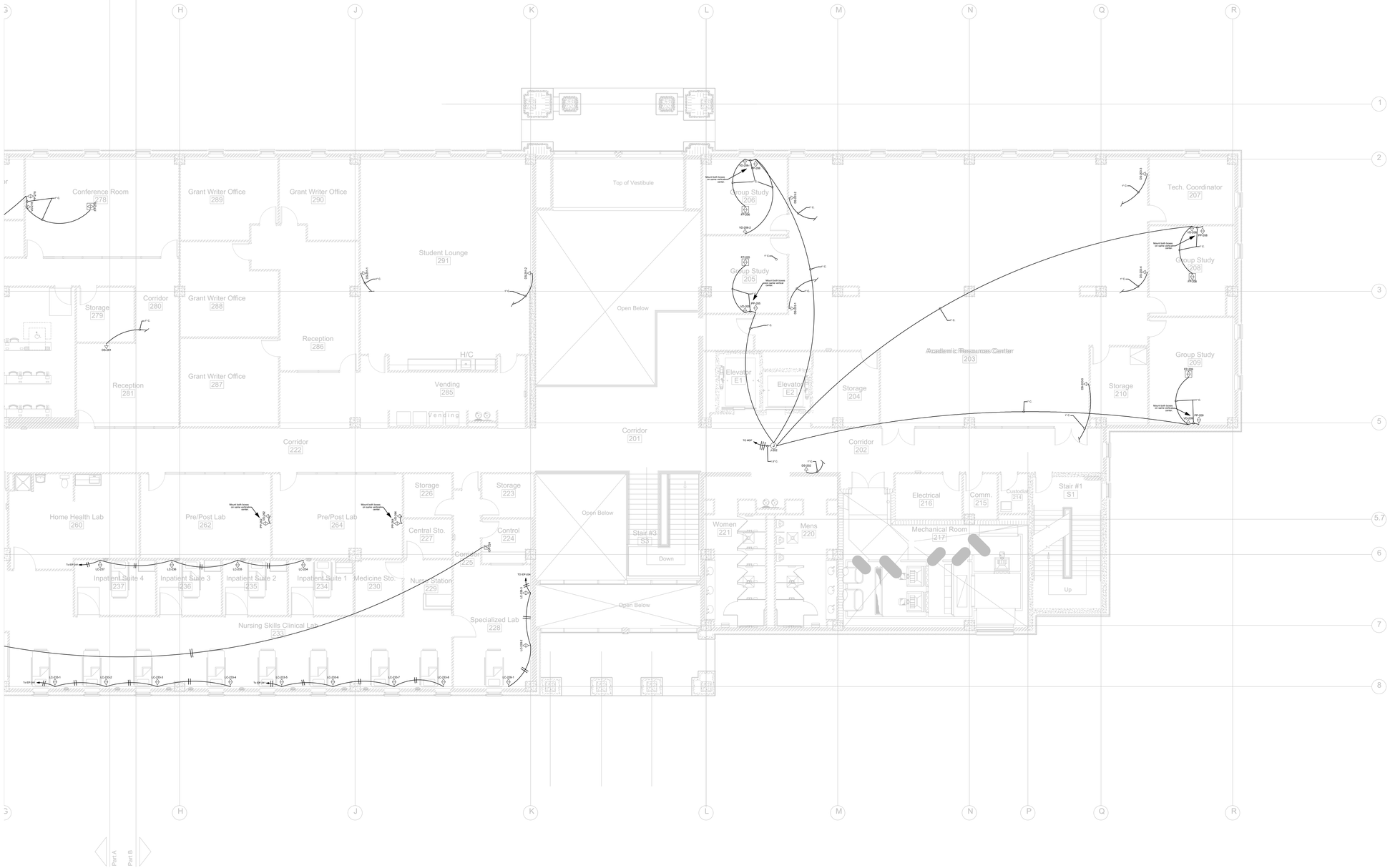

Gracenote Consulting, Inc.
Consultants in Acoustics & Audio Visual Technology

PO Box 3342
Meridian MS 39303

V: 601.207.0510
F: 601.500.5330

http://www.gracenoteconsulting.com

These drawings and their associated specifications, ideas, concepts, arrangements, designs and layouts are, and shall remain the property of the architect and consultant and no part thereof shall be copied, disclosed or distributed to any other party, or used in connection with any work or project other than the specific work as noted on these drawings without the express written permission of the consultant. Visual contact with these drawings or specifications or any other intellectual propery associated with the project shall constitute acceptance of this policy. © Copyright Gracenote Consulting, Inc.

STUDIO SOUTH
ARCHITECTS, PLLC

in association with

Eley Associates / Architects, P.A.

628 Washington Avenue, Suite C
Ocean Springs, MS 39564
228-762-8575 fax 769-9545

CONSULTANTS

STRUCTURAL

Structural Design Group
Contact: Thomas C. Schaeffer, P.E.
220 Great Circle Road Suite 106
Nashville, TN 37228
Tele: 615-255-5537

MECHANICAL

Eldridge & Associates, P.A.
Contact: Jimmy W. Eldridge, P.E.
604 HWY. 80 West Suite U
Clinton, MS
Tele: 601-925-5258

ELECTRICAL

Watkins & O'Gwynn
Contact: Holden O'Gwynn, Jr., P.E.
4523 Office Park Drive
Jackson, MS 39206
Tele: 601-982-3313

CIVIL

Ford Engineering Services, PLLC
Contact: Joel Ford
2010 Oak Grove Road
Building 4, Suite 1
Hattiesburg, MS 39402
Tele: 601-264-7296

PROFESSIONAL SEALS

PROJECT TITLE

GS# 108-261

School of Nursing Building

University of Southern Mississippi
(Institutions of Higher Learning)
Hattiesburg, MS

ISSUE

MARK	DATE	DESCRIPTION
	02-21-14	CONSTRUCTION DOCUMENTS
	10.1.15	Revised per owner's requirements
	12.1.15	AV Bid Documents
	4.4.16	AV Bid Documents Rev1

MANAGEMENT

PROJECT NO:
PROJECT AREA:
CAD DWG FILE:
DRAWN BY:
CHECKED BY:

SHEET TITLE

SECOND FLOOR
AV RACEWAY PLAN
PART B

AV 1.6

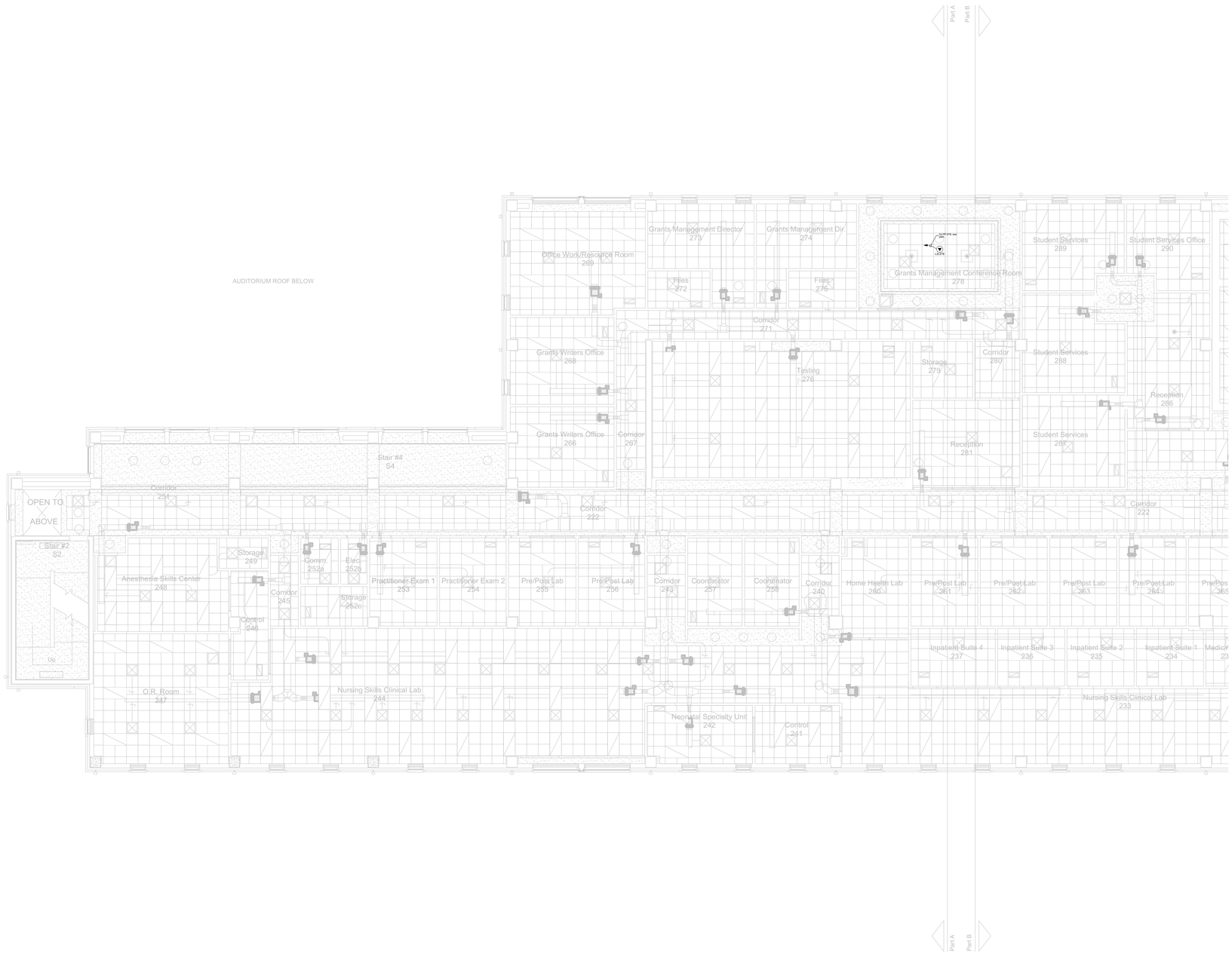

Gracenote Consulting, Inc.
Consultants in Acoustics & Audio Visual Technology

PO Box 3342
Meridian MS 39303

V: 601.207.0510
F: 601.500.5330

http://www.gracenoteconsulting.com

These drawings and their associated specifications, ideas, concepts, arrangements, designs and layouts are, and shall remain the property of the architect and consultant and no part thereof shall be copied, disclosed or distributed to any other party, or used in connection with any work or project other than the specific work as noted on these drawings without the express written permission of the consultant. Visual contact with these drawings or specifications or any other intellectual propery associated with the project shall constitute acceptance of this policy. © Copyright Gracenote Consulting, Inc.

STUDIO SOUTH
ARCHITECTS, PLLC

in association with

Eley Associates / Architects, P.A.

628 Washington Avenue, Suite C
Ocean Springs, MS 39564
228-762-8575 fax 769-9545

CONSULTANTS

STRUCTURAL

Structural Design Group
Contact: Thomas C. Schaeffer, P.E.
220 Great Circle Road Suite 106
Nashville, TN 37228
Tele: 615-255-5537

MECHANICAL

Eldridge & Associates, P.A.
Contact: Jimmy W. Eldridge, P.E.
604 HWY. 80 West Suite U
Clinton, MS
Tele: 601-925-5258

ELECTRICAL

Watkins & O'Gwynn
Contact: Holden O'Gwynn, Jr., P.E.
4523 Office Park Drive
Jackson, MS 39206
Tele: 601-982-3313

CIVIL

Ford Engineering Services, PLLC
Contact: Joel Ford
2010 Oak Grove Road
Building 4, Suite 1
Hattiesburg, MS 39402
Tele: 601-264-7296

PROFESSIONAL SEALS

PROJECT TITLE

GS# 108-261

School of Nursing Building

University of Southern Mississippi
(Institutions of Higher Learning)
Hattiesburg, MS

ISSUE

MARK	DATE	DESCRIPTION
	02-21-14	CONSTRUCTION DOCUMENTS
	10.1.15	Revised per owner's requirements
	12.1.15	AV Bid Documents
	4.4.16	AV Bid Documents Rev1

MANAGEMENT

PROJECT NO:
PROJECT AREA:
CAD DWG FILE:
DRAWN BY:
CHECKED BY:

SHEET TITLE

SECOND FLOOR
AV RACEWAY
REFLECTED CEILING
PLAN
PART A

AV 1.7

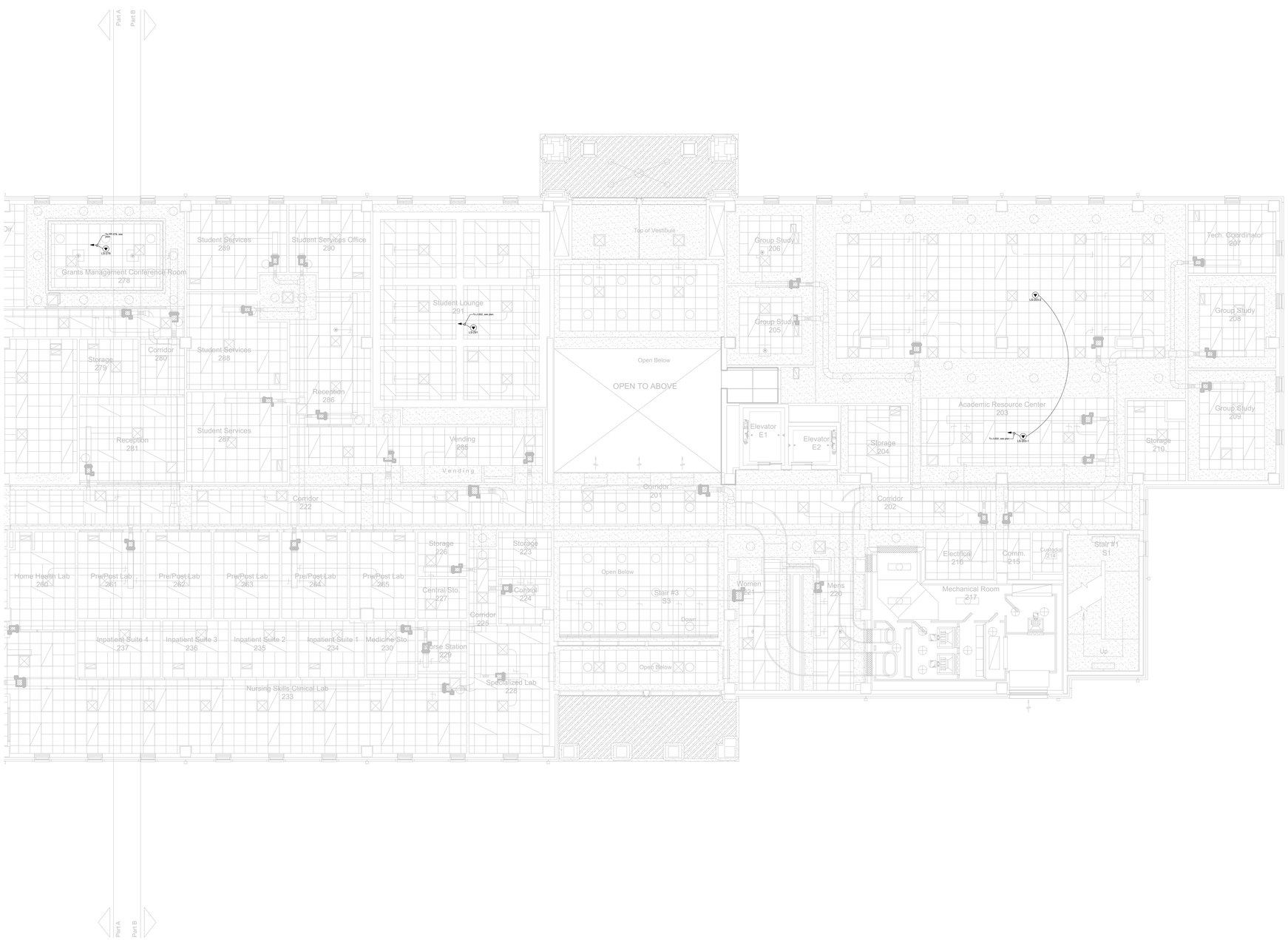

STUDIO SOUTH
ARCHITECTS, PLLC

in association with

Eley Associates / Architects, P.A.

628 Washington Avenue, Suite C
Ocean Springs, MS 39564
228-762-8575 fax 769-9545

CONSULTANTS

STRUCTURAL

Structural Design Group
Contact: Thomas C. Schaeffer, P.E.
220 Great Circle Road Suite 106
Nashville, TN 37228
Tele: 615-255-5537

MECHANICAL

Eldridge & Associates, P.A.
Contact: Jimmy W. Eldridge, P.E.
604 HWY. 80 West Suite U
Clinton, MS
Tele: 601-925-5258

ELECTRICAL

Watkins & O'Gwynn
Contact: Holden O'Gwynn, Jr., P.E.
4523 Office Park Drive
Jackson, MS 39206
Tele: 601-982-3313

CIVIL

Ford Engineering Services, PLLC
Contact: Joel Ford
2010 Oak Grove Road
Building 4, Suite 1
Hattiesburg, MS 39402
Tele: 601-264-7296

PROFESSIONAL SEALS

PROJECT TITLE

GS# 108-261

School of Nursing Building

University of Southern Mississippi
(Institutions of Higher Learning)
Hattiesburg, MS

ISSUE

MARK	DATE	DESCRIPTION
	02-21-14	CONSTRUCTION DOCUMENTS
	10.1.15	Revised per owner's requirements
	12.1.15	AV Bid Documents
	4.4.16	AV Bid Documents Rev1

MANAGEMENT

PROJECT NO:
PROJECT AREA:
CAD DWG FILE:
DRAWN BY:
CHECKED BY:

SHEET TITLE

SECOND FLOOR
AV RACEWAY
REFLECTED CEILING
PLAN
PART B

AV 1.8

Gracenote Consulting, Inc.
Consultants in Acoustics & Audio Visual Technology

PO Box 3342
Meridian MS 39303

V: 601.227.0810
F: 601.500.5330

http://www.gracenoteconsulting.com

These drawings and their associated specifications, ideas, concepts, arrangements, designs and layouts are, and shall remain the property of the architect and consultant and no part thereof shall be copied, disclosed or distributed to any other party, or used in connection with any work or project other than the specific work as noted on these drawings without the express written permission of the consultant. Visual contact with these drawings or specifications or any other intellectual propery associated with the project shall constitute acceptance of this policy. © Copyright Gracenote Consulting, Inc.

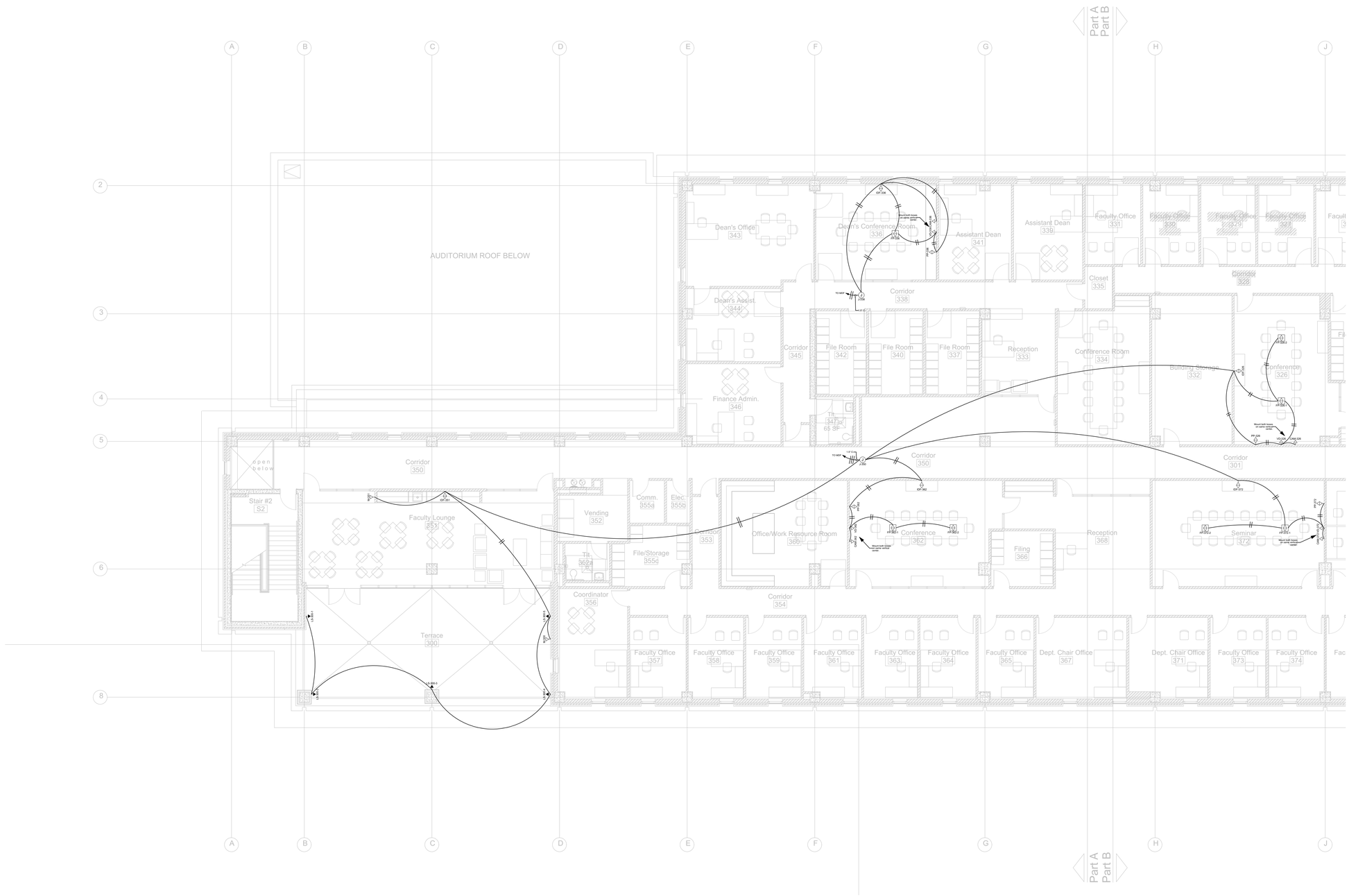

Gracenote Consulting, Inc.
Consultants in Acoustics & Audio Visual Technology

PO Box 3342
Meridian MS 39303

V: 601.207.0510
F: 601.500.5330

http://www.gracenoteconsulting.com

These drawings and their associated specifications, ideas, concepts, arrangements, designs and layouts are, and shall remain the property of the architect and consultant and no part thereof shall be copied, disclosed or distributed to any other party, or used in connection with any work or project other than the specific work as noted on these drawings without the express written permission of the consultant. Visual contact with these drawings or specifications or any other intellectual propery associated with the project shall constitute acceptance of this policy. © Copyright Gracenote Consulting, Inc.

STUDIO SOUTH
ARCHITECTS, PLLC

in association with

Eley Associates / Architects, P.A.

628 Washington Avenue, Suite C
Ocean Springs, MS 39564
228-762-8575 fax 769-9545

CONSULTANTS

STRUCTURAL

Structural Design Group
Contact: Thomas C. Schaeffer, P.E.
220 Great Circle Road Suite 106
Nashville, TN 37228
Tele: 615-255-5537

MECHANICAL

Eldridge & Associates, P.A.
Contact: Jimmy W. Eldridge, P.E.
604 HWY. 80 West Suite U
Clinton, MS
Tele: 601-925-5258

ELECTRICAL

Watkins & O'Gwynn
Contact: Holden O'Gwynn, Jr., P.E.
4523 Office Park Drive
Jackson, MS 39206
Tele: 601-982-3313

CIVIL

Ford Engineering Services, PLLC
Contact: Joel Ford
2010 Oak Grove Road
Building 4, Suite 1
Hattiesburg, MS 39402
Tele: 601-264-7296

PROFESSIONAL SEALS

PROJECT TITLE

GS# 108-261

School of Nursing Building

University of Southern Mississippi
(Institutions of Higher Learning)
Hattiesburg, MS

ISSUE

MARK	DATE	DESCRIPTION
	02-21-14	CONSTRUCTION DOCUMENTS
	10.1.15	Revised per owner's requirements
	12.1.15	AV Bid Documents
	4.4.16	AV Bid Documents Rev1

MANAGEMENT

PROJECT NO:
PROJECT AREA:
CAD DWG FILE:
DRAWN BY:
CHECKED BY:

SHEET TITLE

THIRD FLOOR
AV RACEWAY PLAN
PART A

AV 1.9

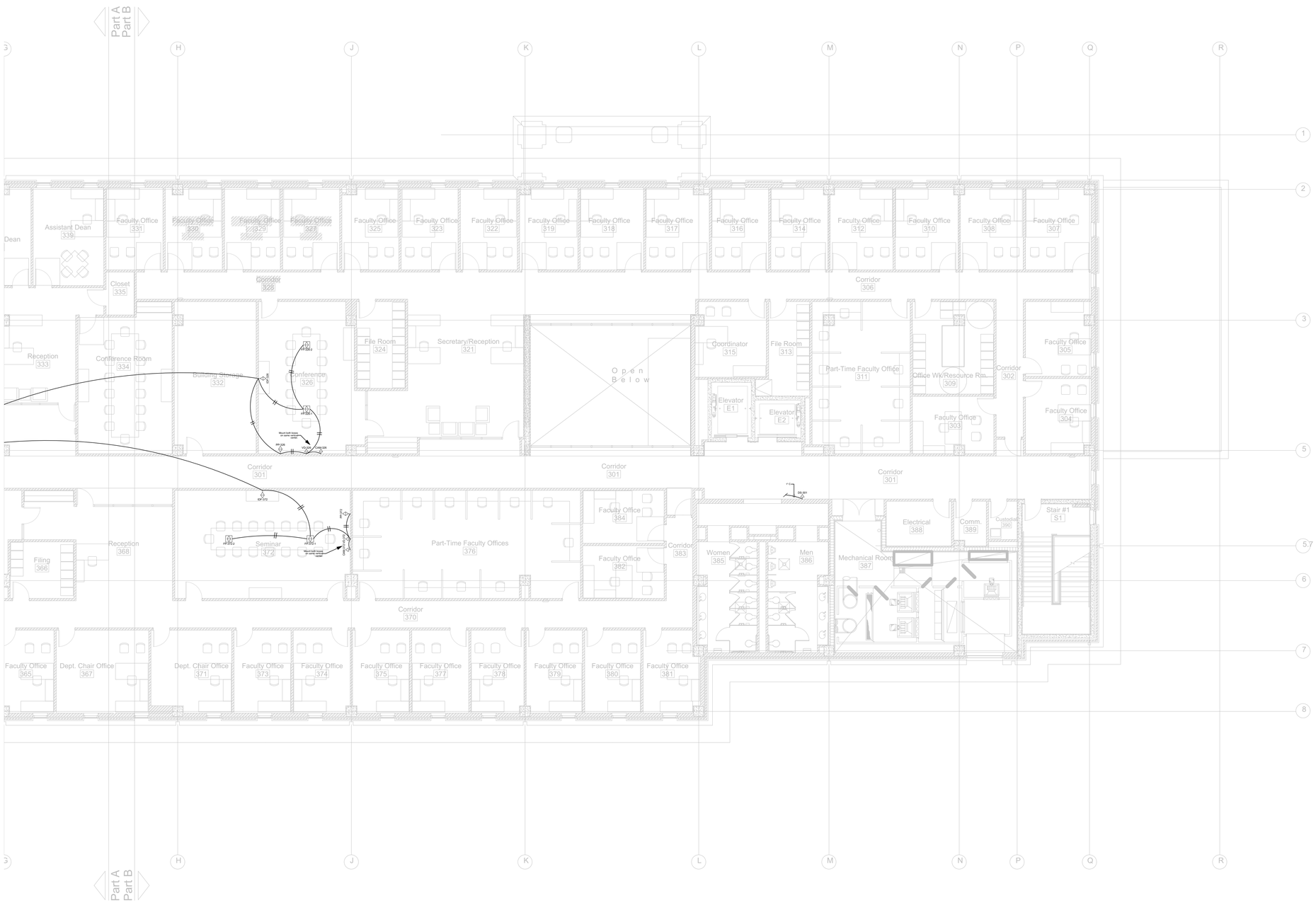

STUDIO SOUTH
ARCHITECTS, PLLC

in association with

Eley Associates / Architects, P.A.

628 Washington Avenue, Suite C
Ocean Springs, MS 39564
228-762-8575 fax 769-9545

CONSULTANTS

STRUCTURAL

Structural Design Group
Contact: Thomas C. Schaeffer, P.E.
220 Great Circle Road Suite 106
Nashville, TN 37228
Tele: 615-255-5537

MECHANICAL

Eldridge & Associates, P.A.
Contact: Jimmy W. Eldridge, P.E.
604 HWY. 80 West Suite U
Clinton, MS
Tele: 601-925-5258

ELECTRICAL

Watkins & O'Gwynn
Contact: Holden O'Gwynn, Jr., P.E.
4523 Office Park Drive
Jackson, MS 39206
Tele: 601-982-3313

CIVIL

Ford Engineering Services, PLLC
Contact: Joel Ford
2010 Oak Grove Road
Building 4, Suite 1
Hattiesburg, MS 39402
Tele: 601-264-7296

PROFESSIONAL SEALS

PROJECT TITLE

GS# 108-261

School of Nursing Building

University of Southern Mississippi
(Institutions of Higher Learning)
Hattiesburg, MS

ISSUE

MARK	DATE	DESCRIPTION
	02-21-14	CONSTRUCTION DOCUMENTS
	10.1.15	Revised per owner's requirements
	12.1.15	AV Bid Documents
	4.4.16	AV Bid Documents Rev1

MANAGEMENT

PROJECT NO:
PROJECT AREA:
CAD DWG FILE:
DRAWN BY:
CHECKED BY:

SHEET TITLE

THIRD FLOOR
AV RACEWAY PLAN
PART B

AV 1.10

Gracenote Consulting, Inc.
Consultants in Acoustics & Audio Visual Technology

PO Box 3342
Meridian MS 39303

V: 601.227.0810
F: 601.500.5330

http://www.gracenoteconsulting.com

These drawings and their associated specifications, ideas, concepts, arrangements, designs and layouts are, and shall remain the property of the architect and consultant and no part thereof shall be copied, disclosed or distributed to any other party, or used in connection with any work or project other than the specific work as noted on these drawings without the express written permission of the consultant. Visual contact with these drawings or specifications or any other intellectual propery associated with the project shall constitute acceptance of this policy. © Copyright Gracenote Consulting, Inc.

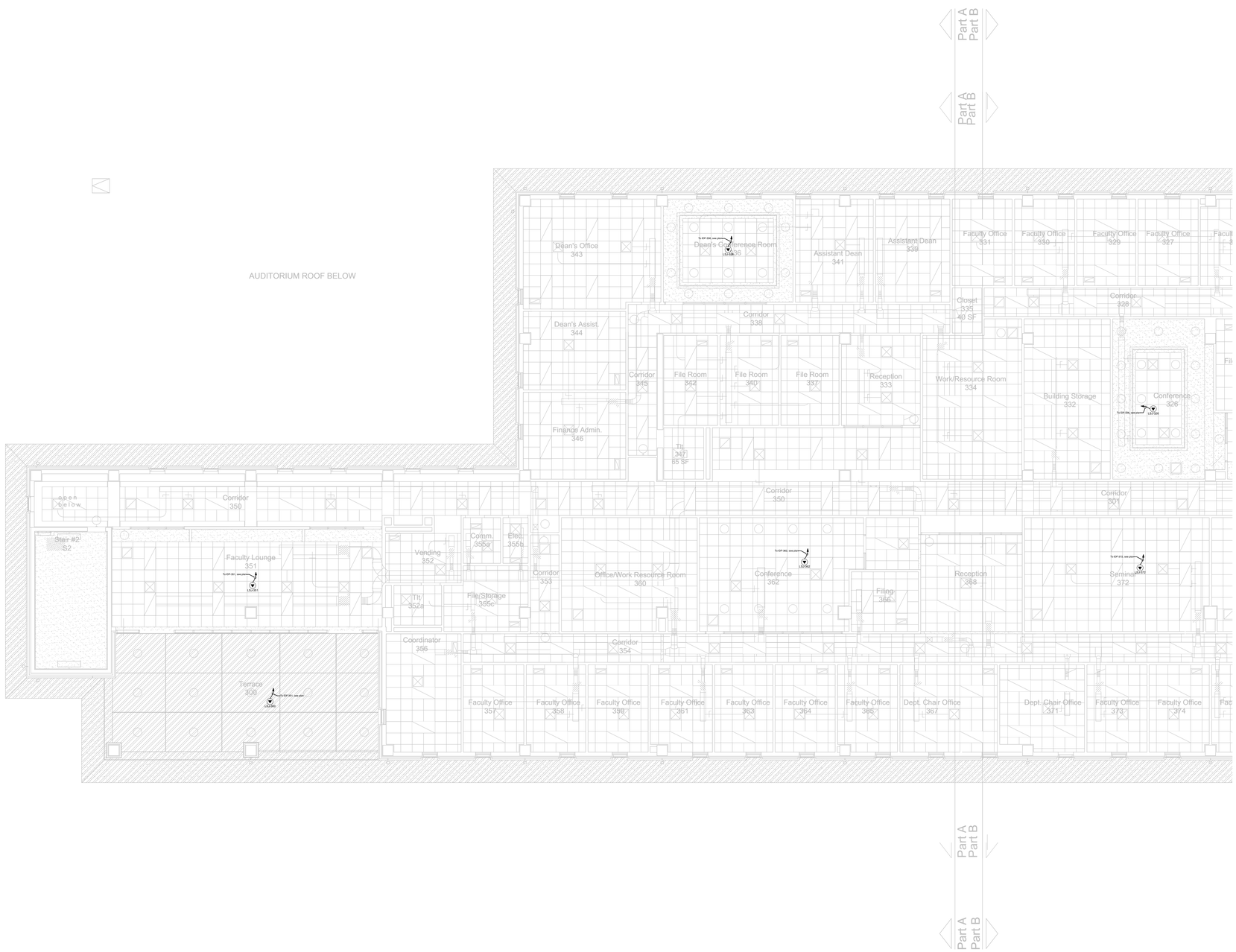

Gracenote Consulting, Inc.
Consultants in Acoustics & Audio Visual Technology

PO Box 3342
Meridian MS 39303

V: 601.207.0510
F: 601.500.5330

http://www.gracenoteconsulting.com

These drawings and their associated specifications, ideas, concepts, arrangements, designs and layouts are, and shall remain the property of the architect and consultant and no part thereof shall be copied, disclosed or distributed to any other party, or used in connection with any work or project other than the specific work as noted on these drawings without the express written permission of the consultant. Visual contact with these drawings or specifications or any other intellectual propery associated with the project shall constitute acceptance of this policy. © Copyright Gracenote Consulting, Inc.

STUDIO SOUTH
ARCHITECTS, PLLC

in association with

Eley Associates / Architects, P.A.

628 Washington Avenue, Suite C
Ocean Springs, MS 39564
228-762-8575 fax 769-9545

CONSULTANTS

STRUCTURAL

Structural Design Group
Contact: Thomas C. Schaeffer, P.E.
220 Great Circle Road Suite 106
Nashville, TN 37228
Tele: 615-255-5537

MECHANICAL

Eldridge & Associates, P.A.
Contact: Jimmy W. Eldridge, P.E.
604 HWY. 80 West Suite U
Clinton, MS
Tele: 601-925-5258

ELECTRICAL

Watkins & O'Gwynn
Contact: Holden O'Gwynn, Jr., P.E.
4523 Office Park Drive
Jackson, MS 39206
Tele: 601-982-3313

CIVIL

Ford Engineering Services, PLLC
Contact: Joel Ford
2010 Oak Grove Road
Building 4, Suite 1
Hattiesburg, MS 39402
Tele: 601-264-7296

PROFESSIONAL SEALS

PROJECT TITLE

GS# 108-261

School of Nursing Building

University of Southern Mississippi
(Institutions of Higher Learning)
Hattiesburg, MS

ISSUE

MARK	DATE	DESCRIPTION
	02-21-14	CONSTRUCTION DOCUMENTS
	10.1.15	Revised per owner's requirements
	12.1.15	AV Bid Documents
	4.4.16	AV Bid Documents Rev1

MANAGEMENT

PROJECT NO:
PROJECT AREA:
CAD DWG FILE:
DRAWN BY:
CHECKED BY:

SHEET TITLE

THIRD FLOOR
AV RACEWAY
REFLECTED CEILING
PLAN
PART A

AV 1.11

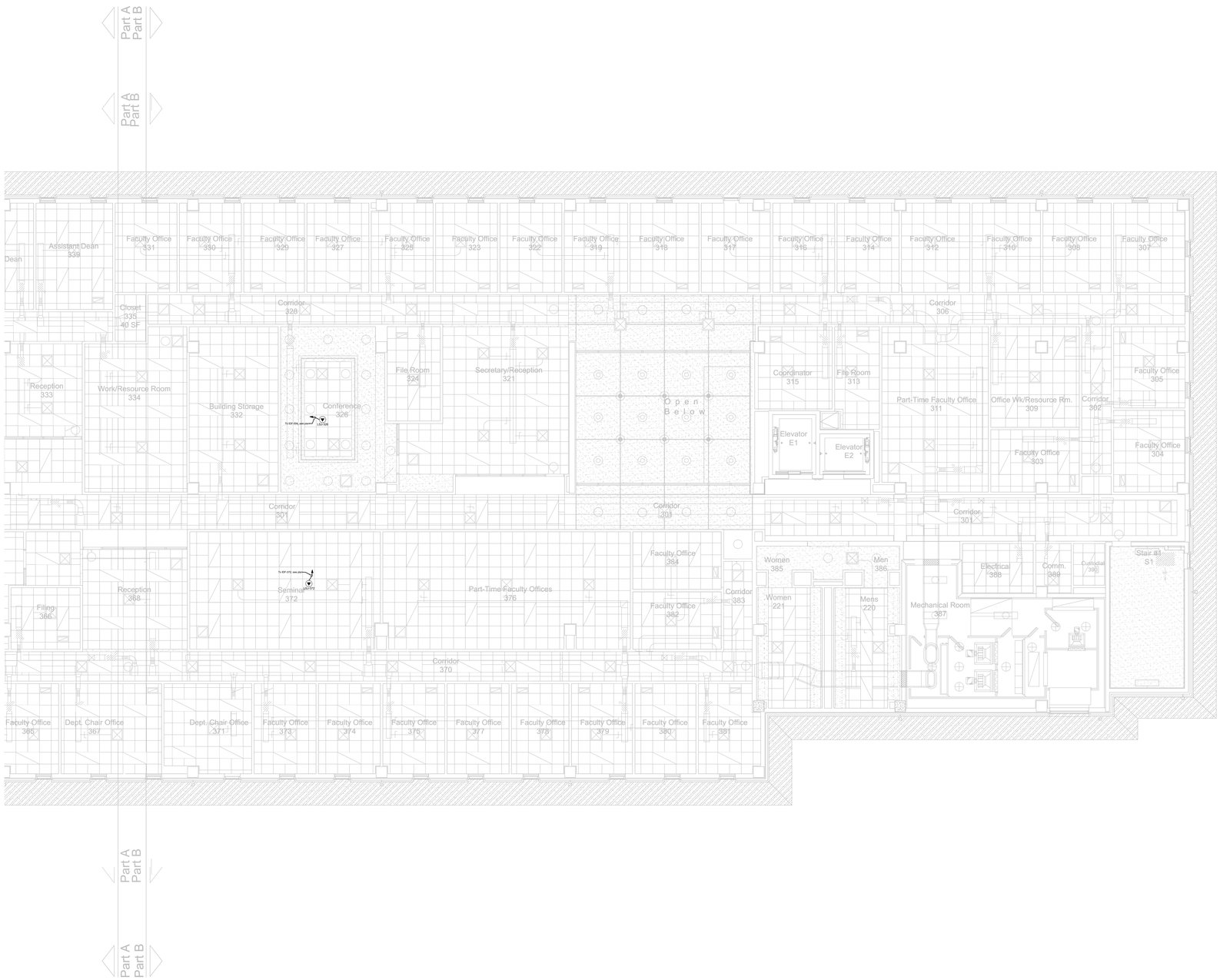

STUDIO SOUTH
ARCHITECTS, PLLC

in association with

Eley Associates / Architects, P.A.

628 Washington Avenue, Suite C
Ocean Springs, MS 39564
228-762-8575 fax 769-9545

CONSULTANTS

STRUCTURAL

Structural Design Group
Contact: Thomas C. Schaeffer, P.E.
220 Great Circle Road Suite 106
Nashville, TN 37228
Tele: 615-255-5537

MECHANICAL

Eldridge & Associates, P.A.
Contact: Jimmy W. Eldridge, P.E.
604 HWY. 80 West Suite U
Clinton, MS
Tele: 601-925-5258

ELECTRICAL

Watkins & O'Gwynn
Contact: Holden O'Gwynn, Jr., P.E.
4523 Office Park Drive
Jackson, MS 39206
Tele: 601-982-3313

CIVIL

Ford Engineering Services, PLLC
Contact: Joel Ford
2010 Oak Grove Road
Building 4, Suite 1
Hattiesburg, MS 39402
Tele: 601-264-7296

PROFESSIONAL SEALS

PROJECT TITLE

GS# 108-261

School of Nursing Building

University of Southern Mississippi
(Institutions of Higher Learning)
Hattiesburg, MS

ISSUE

MARK	DATE	DESCRIPTION
	02-21-14	CONSTRUCTION DOCUMENTS
	10.1.15	Revised per owner's requirements
	12.1.15	AV Bid Documents
	4.4.16	AV Bid Documents Rev1

MANAGEMENT

PROJECT NO:
PROJECT AREA:
CAD DWG FILE:
DRAWN BY:
CHECKED BY:

SHEET TITLE

THIRD FLOOR
AV RACEWAY
REFLECTED CEILING
PLAN
PART B

AV 1.12

Gracenote Consulting, Inc.
Consultants in Acoustics & Audio Visual Technology

PO Box 3342
Meridian MS 39303

V: 601.207.0510
F: 601.500.5330

http://www.gracenoteconsulting.com

These drawings and their associated specifications, ideas, concepts, arrangements, designs and layouts are, and shall remain the property of the architect and consultant and no part thereof shall be copied, disclosed or distributed to any other party, or used in connection with any work or project other than the specific work as noted on these drawings without the express written permission of the consultant. Visual contact with these drawings or specifications or any other intellectual propery associated with the project shall constitute acceptance of this policy. © Copyright Gracenote Consulting, Inc.

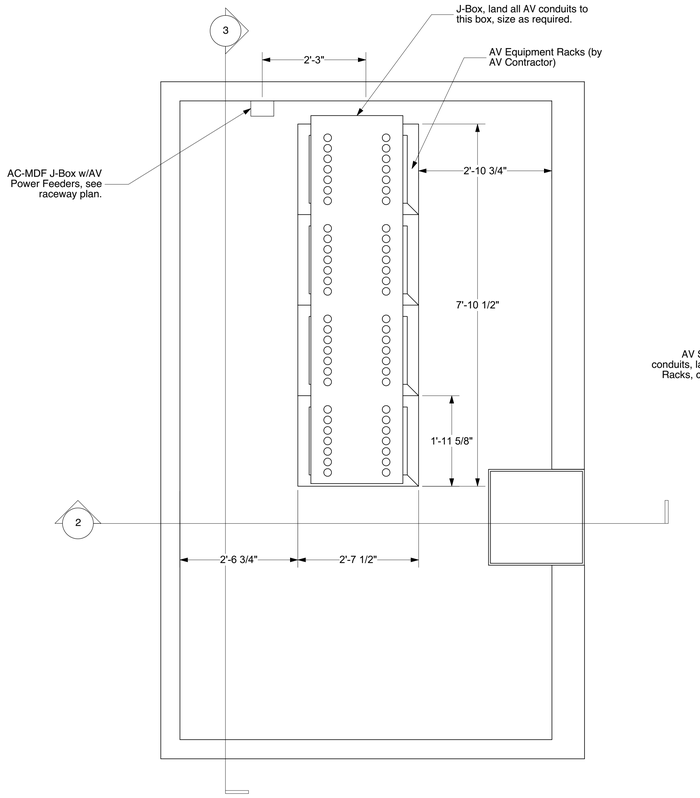

1 AV MDF Plan (Control Room 141)
Scale: 3/4" = 1'-0"

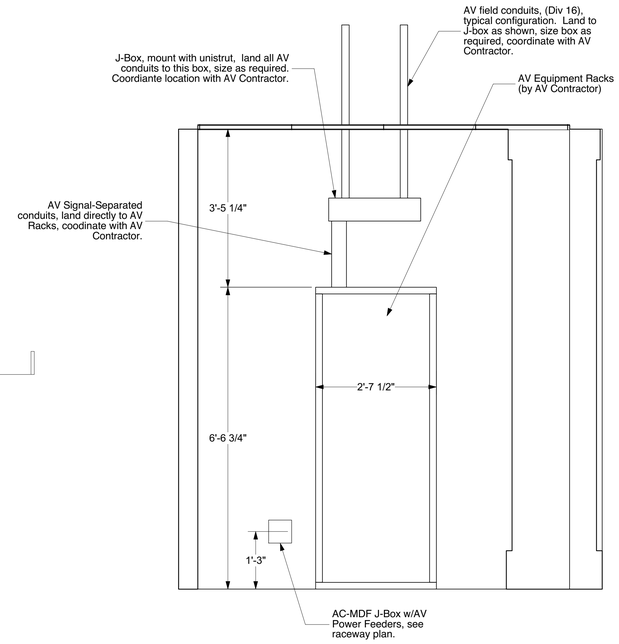

2 AV MDF Section
Scale: 3/4" = 1'-0"

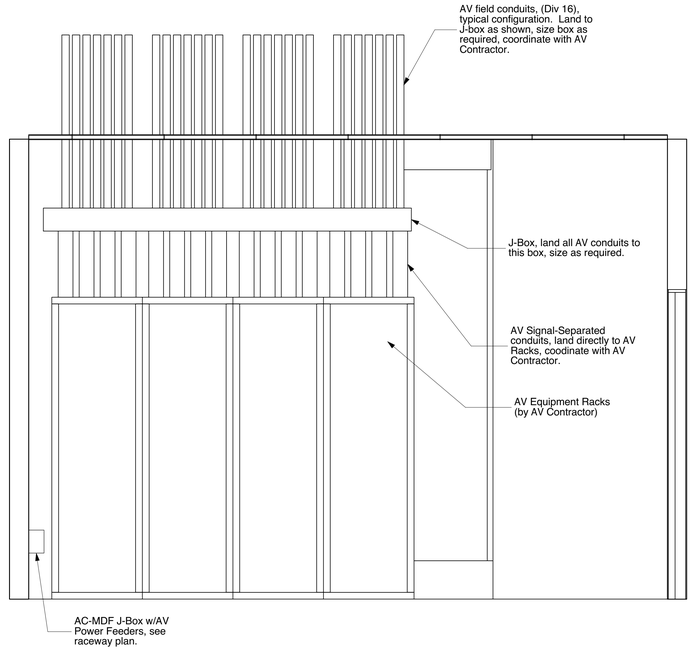

3 AV MDF Rear Elevation
Scale: 3/4" = 1'-0"

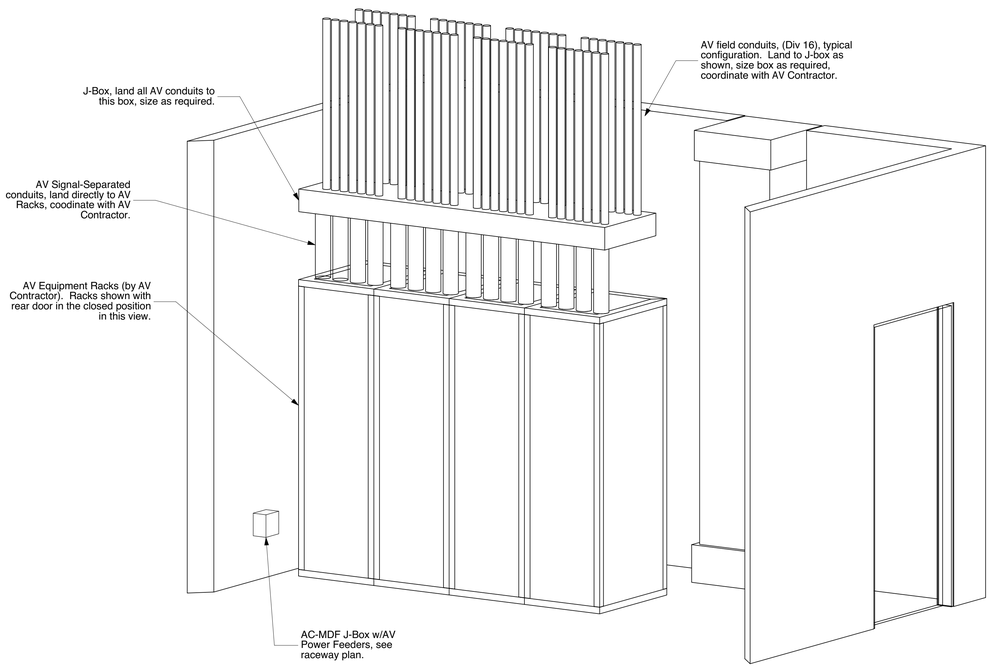

4 AV MDF Perspective
Scale: 3/4" = 1'-0"

NOTES

1. Dimensions are conceptual, actual dimensions are dependant on rack manufacturer and requirements.
2. Verify all space and rack requirements.
3. Coordinate conduit landings, power termination and all J-Box configurations with AV Contractor.
4. Clearance dimensions shown are minimum requirements. Provide access to front and rear of AV Racks as shown for service access.
5. Provide plastic caps/sleeves to all conduit stubs.
6. Isolate power-feeder conduit from AV rack with a plastic or rubber sleeve. Do not use metallic flex conduit.
7. Contractor is free to set a J-Box at any/all conduit stub-downs/ups as applicable. Coordinate with AV Contractor.
8. Isolate raceway and power distribution systems from A/V conductors and racks.
9. Ground conductor shall be isolated from all mechanical systems.

Gracenote Consulting, Inc.
Consultants in Acoustics & Audio Visual Technology

PO Box 3342
Meridian MS 39303

V: 601.207.0510
F: 601.500.5330

http://www.gracenoteconsulting.com

These drawings and their associated specifications, ideas, concepts, arrangements, designs and layouts are, and shall remain the property of the architect and consultant and no part thereof shall be copied, disclosed or distributed to any other party, or used in connection with any work or project other than the specific work as noted on these drawings without the express written permission of the consultant. Visual contact with these drawings or specifications or any other intellectual propery associated with the project shall constitute aceptance of this policy. © Copyright Gracenote Consulting, Inc.

STUDIO SOUTH
ARCHITECTS, PLLC

in association with
Eley Associates / Architects, P.A.

628 Washington Avenue, Suite C
Ocean Springs, MS 39564
228-762-8575 fax 769-9545

CONSULTANTS

STRUCTURAL

Structural Design Group
Contact: Thomas C. Schaeffer, P.E.
220 Great Circle Road Suite 106
Nashville, TN 37228
Tele: 615-255-5537

MECHANICAL

Eldridge & Associates, P.A.
Contact: Jimmy W. Eldridge, P.E.
604 HWY. 80 West Suite U
Clinton, MS
Tele: 601-925-5258

ELECTRICAL

Watkins & O'Gwynn
Contact: Holden O'Gwynn, Jr., P.E.
4523 Office Park Drive
Jackson, MS 39206
Tele: 601-982-3313

CIVIL

Ford Engineering Services, PLLC
Contact: Joel Ford
2010 Oak Grove Road
Building 4, Suite 1
Hattiesburg, MS 39402
Tele: 601-264-7296

PROFESSIONAL SEALS

PROJECT TITLE

GS# 108-261

School of Nursing Building

University of Southern Mississippi
(Institutions of Higher Learning)
Hattiesburg, MS

ISSUE

MARK	DATE	DESCRIPTION
	02-21-14	CONSTRUCTION DOCUMENTS
	10.1.15	Revised per owner's requirements
	12.1.15	AV Bid Documents
	4.4.16	AV Bid Documents Rev1

MANAGEMENT

PROJECT NO:
PROJECT AREA:
CAD DWG FILE:
DRAWN BY:
CHECKED BY:

SHEET TITLE

AV MDF DETAILS
(Control Room 141)

AV 1.13

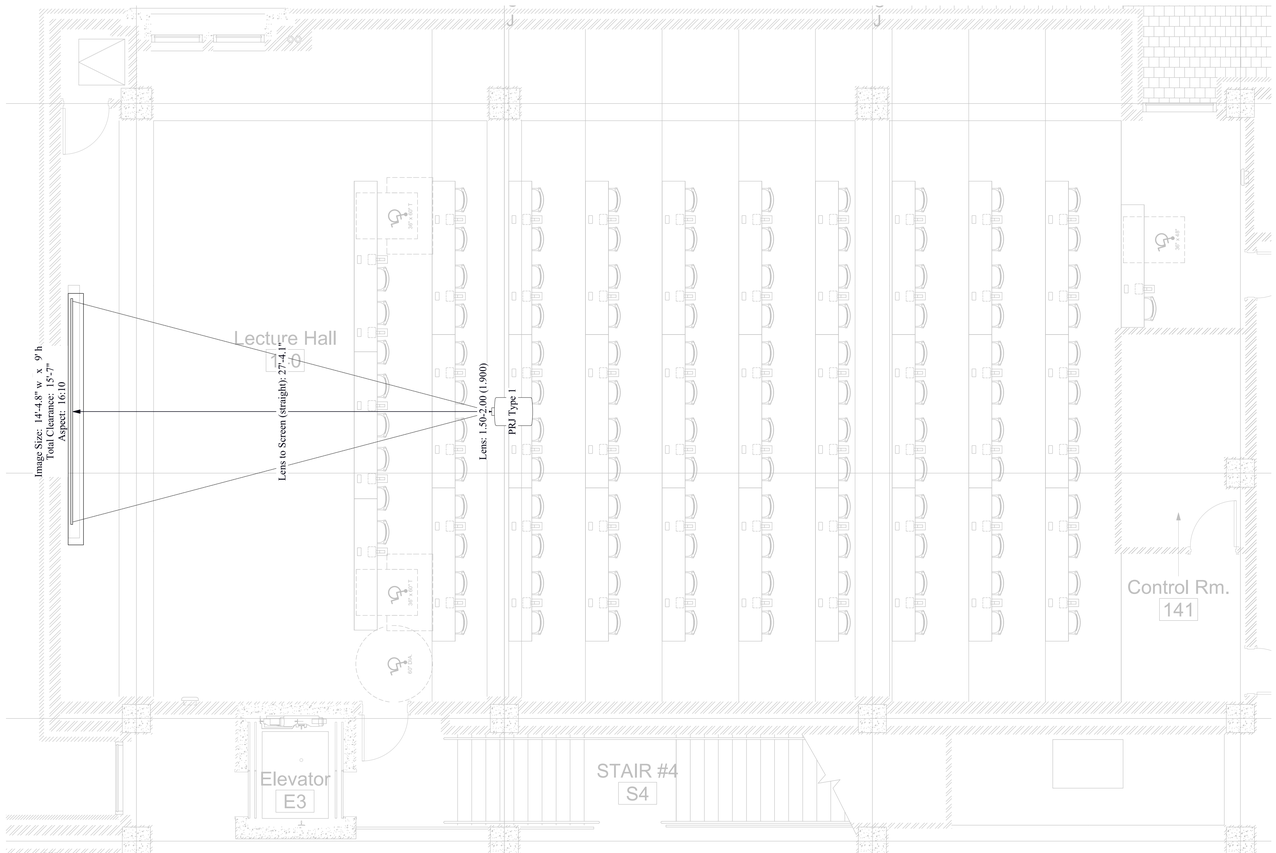

1 Lecture Hall Projection Plan
Scale: 1/4" = 1'-0"

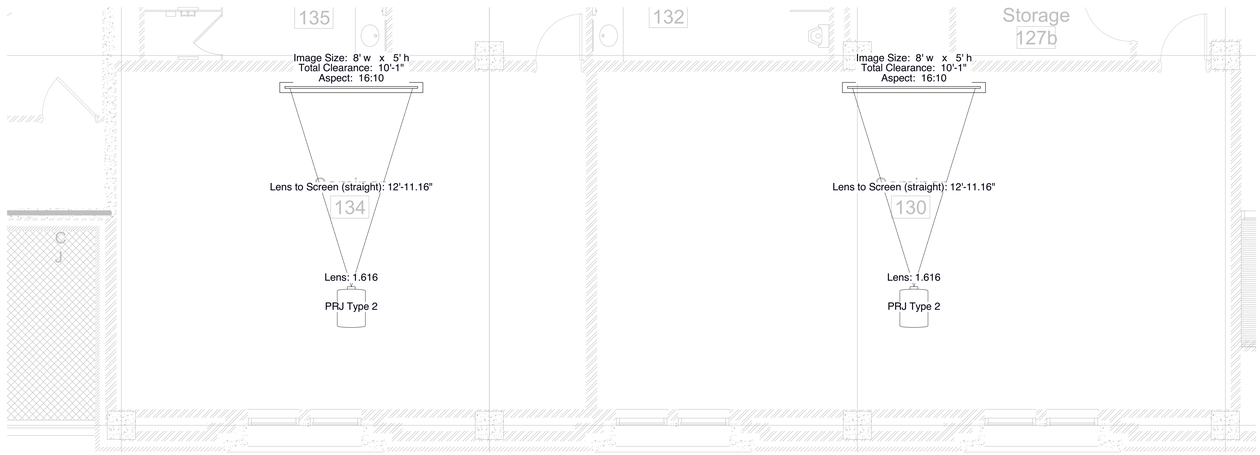

2 Seminar Rooms Projection Plan
Scale: 1/4" = 1'-0"

STUDIO SOUTH
ARCHITECTS, PLLC

in association with
Eley Associates / Architects, P.A.

628 Washington Avenue, Suite C
Ocean Springs, MS 39564
228-762-8575 fax 769-9545

CONSULTANTS

STRUCTURAL

Structural Design Group
Contact: Thomas C. Schaeffer, P.E.
220 Great Circle Road Suite 106
Nashville, TN 37228
Tele: 615-255-5537

MECHANICAL

Eldridge & Associates, P.A.
Contact: Jimmy W. Eldridge, P.E.
604 HWY. 80 West Suite U
Clinton, MS
Tele: 601-925-5258

ELECTRICAL

Watkins & O'Gwynn
Contact: Holden O'Gwynn, Jr., P.E.
4523 Office Park Drive
Jackson, MS 39206
Tele: 601-982-3313

CIVIL

Ford Engineering Services, PLLC
Contact: Joel Ford
2010 Oak Grove Road
Building 4, Suite 1
Hattiesburg, MS 39402
Tele: 601-264-7296

PROFESSIONAL SEALS

PROJECT TITLE

GS# 108-261

School of Nursing Building

University of Southern Mississippi
(Institutions of Higher Learning)
Hattiesburg, MS

ISSUE

MARK	DATE	DESCRIPTION
	02-21-14	CONSTRUCTION DOCUMENTS
	10.1.15	Revised per owner's requirements
	12.1.15	AV Bid Documents
	4.4.16	AV Bid Documents Rev1

MANAGEMENT

PROJECT NO:
PROJECT AREA:
CAD DWG FILE:
DRAWN BY:
CHECKED BY:

SHEET TITLE

FIRST FLOOR
PROJECTION PLAN
1 of 2

AV 2.1

Gracenote Consulting, Inc.
Consultants in Acoustics & Audio Visual Technology

PO Box 3342
Meridian MS 39303

V: 601.207.0510
F: 601.500.5330

http://www.gracenoteconsulting.com

These drawings and their associated specifications, ideas, concepts, arrangements, designs and layouts are, and shall remain the property of the architect and consultant and no part thereof shall be copied, disclosed or distributed to any other party, or used in connection with any work or project other than the specific work as noted on these drawings without the express written permission of the consultant. Visual contact with these drawings or specifications or any other intellectual propery associated with the project shall constitute acceptance of this policy. © Copyright Gracenote Consulting, Inc.

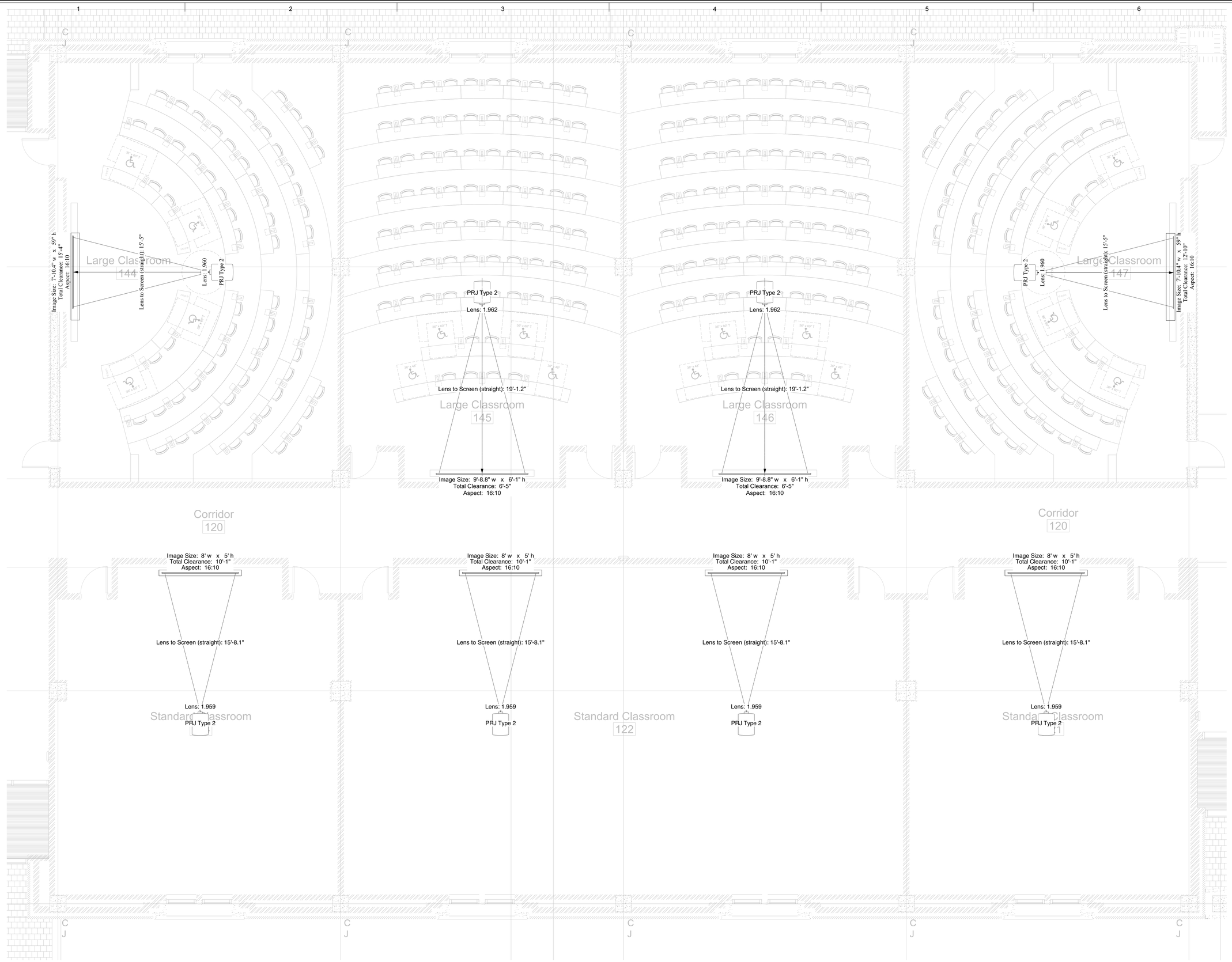

Gracenote Consulting, Inc.
Consultants in Acoustics & Audio Visual Technology

PO Box 3342
Meridian MS 39303

V: 601.207.0510
F: 601.500.5330

http://www.gracenoteconsulting.com

These drawings and their associated specifications, ideas, concepts, arrangements, designs and layouts are, and shall remain the property of the architect and consultant and no part thereof shall be copied, disclosed or distributed to any other party, or used in connection with any work or project other than the specific work as noted on these drawings without the express written permission of the consultant. Visual contact with these drawings or specifications or any other intellectual propery associated with the project shall constitute acceptance of this policy. © Copyright Gracenote Consulting, Inc.

STUDIO SOUTH
ARCHITECTS, PLLC

in association with

Eley Associates / Architects, P.A.

628 Washington Avenue, Suite C
Ocean Springs, MS 39564
228-762-8575 fax 769-9545

CONSULTANTS

STRUCTURAL

Structural Design Group
Contact: Thomas C. Schaeffer, P.E.
220 Great Circle Road Suite 106
Nashville, TN 37228
Tele: 615-255-5537

MECHANICAL

Eldridge & Associates, P.A.
Contact: Jimmy W. Eldridge, P.E.
604 HWY. 80 West Suite U
Clinton, MS
Tele: 601-925-5258

ELECTRICAL

Watkins & O'Gwynn
Contact: Holden O'Gwynn, Jr., P.E.
4523 Office Park Drive
Jackson, MS 39206
Tele: 601-982-3313

CIVIL

Ford Engineering Services, PLLC
Contact: Joel Ford
2010 Oak Grove Road
Building 4, Suite 1
Hattiesburg, MS 39402
Tele: 601-264-7296

PROFESSIONAL SEALS

PROJECT TITLE

GS# 108-261

School of Nursing Building

University of Southern Mississippi
(Institutions of Higher Learning)
Hattiesburg, MS

ISSUE

MARK	DATE	DESCRIPTION
	02-21-14	CONSTRUCTION DOCUMENTS
	10.1.15	Revised per owner's requirements
	12.1.15	AV Bid Documents
	4.4.16	AV Bid Documents Rev1

MANAGEMENT

PROJECT NO:
PROJECT AREA:
CAD DWG FILE:
DRAWN BY:
CHECKED BY:

SHEET TITLE

FIRST FLOOR
PROJECTION PLAN
2 of 2

AV 2.2

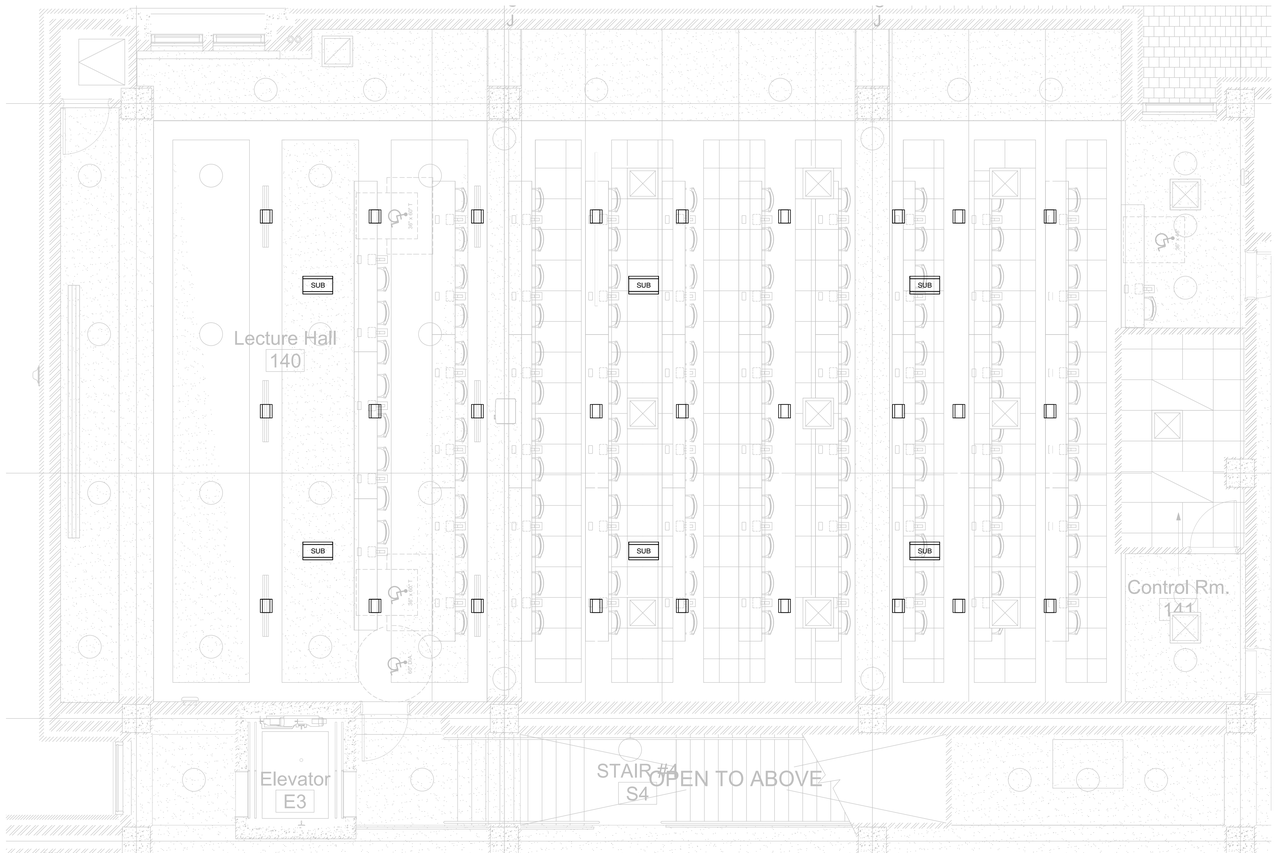

1 Lecture Hall Loudspeaker Plan
Scale: 1/4" = 1'-0"

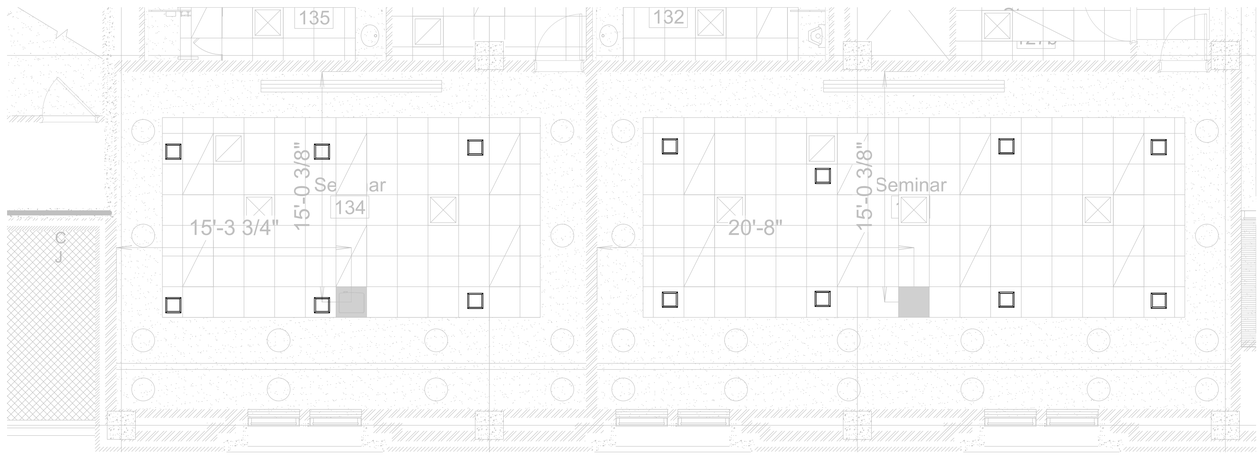

2 Seminar Rooms Loudspeaker Plan
Scale: 1/4" = 1'-0"

STUDIO SOUTH
ARCHITECTS, PLLC

in association with
Eley Associates / Architects, P.A.

628 Washington Avenue, Suite C
Ocean Springs, MS 39564
228-762-8575 fax 769-9545

CONSULTANTS

STRUCTURAL

Structural Design Group
Contact: Thomas C. Schaeffer, P.E.
220 Great Circle Road Suite 106
Nashville, TN 37228
Tele: 615-255-5537

MECHANICAL

Eldridge & Associates, P.A.
Contact: Jimmy W. Eldridge, P.E.
604 HWY. 80 West Suite U
Clinton, MS
Tele: 601-925-5258

ELECTRICAL

Watkins & O'Gwynn
Contact: Holden O'Gwynn, Jr., P.E.
4523 Office Park Drive
Jackson, MS 39206
Tele: 601-982-3313

CIVIL

Ford Engineering Services, PLLC
Contact: Joel Ford
2010 Oak Grove Road
Building 4, Suite 1
Hattiesburg, MS 39402
Tele: 601-264-7296

PROFESSIONAL SEALS

PROJECT TITLE

GS# 108-261

School of Nursing Building

University of Southern Mississippi
(Institutions of Higher Learning)
Hattiesburg, MS

ISSUE

MARK	DATE	DESCRIPTION
	02-21-14	CONSTRUCTION DOCUMENTS
	10.1.15	Revised per owner's requirements
	12.1.15	AV Bid Documents
	4.4.16	AV Bid Documents Rev1

MANAGEMENT

PROJECT NO:
PROJECT AREA:
CAD DWG FILE:
DRAWN BY:
CHECKED BY:

SHEET TITLE

FIRST FLOOR
LOUDSPEAKER PLAN
1 of 2

AV 2.3

Gracenote Consulting, Inc.
Consultants in Acoustics & Audio Visual Technology

PO Box 3342
Meridian MS 39303

V: 601.207.0510
F: 601.500.5330

http://www.gracenoteconsulting.com

These drawings and their associated specifications, ideas, concepts, arrangements, designs and layouts are, and shall remain the property of the architect and consultant and no part thereof shall be copied, disclosed or distributed to any other party, or used in connection with any work or project other than the specific work as noted on these drawings without the express written permission of the consultant. Visual contact with these drawings or specifications or any other intellectual propery associated with the project shall constitute acceptance of this policy. © Copyright Gracenote Consulting, Inc.

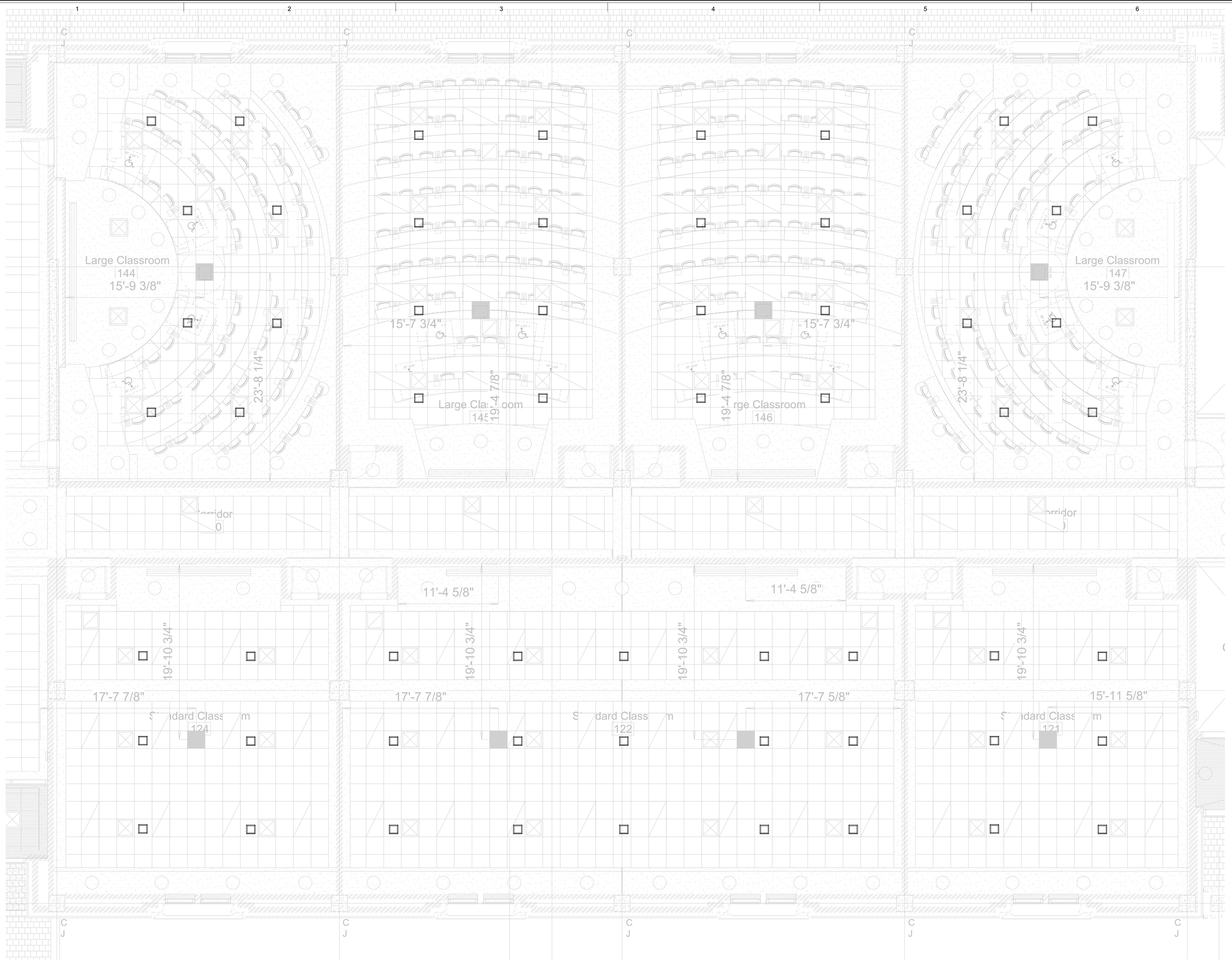

Gracenote Consulting, Inc.
Consultants in Acoustics & Audio Visual Technology

PO Box 3342
Meridian MS 39303

V: 601.207.0510
F: 601.500.5330

http://www.gracenoteconsulting.com

These drawings and their associated specifications, ideas, concepts, arrangements, designs and layouts are, and shall remain the property of the architect and consultant and no part thereof shall be copied, disclosed or distributed to any other party, or used in connection with any work or project other than the specific work as noted on these drawings without the express written permission of the consultant. Visual contact with these drawings or specifications or any other intellectual propery associated with the project shall constitute aceeptance of this policy. © Copyright Gracenote Consulting, Inc.

STUDIO SOUTH
ARCHITECTS, PLLC

in association with

Eley Associates / Architects, P.A.

628 Washington Avenue, Suite C
Ocean Springs, MS 39564
228-762-8575 fax 769-9545

CONSULTANTS

STRUCTURAL

Structural Design Group
Contact: Thomas C. Schaeffer, P.E.
220 Great Circle Road Suite 106
Nashville, TN 37228
Tele: 615-255-5537

MECHANICAL

Eldridge & Associates, P.A.
Contact: Jimmy W. Eldridge, P.E.
604 HWY. 80 West Suite U
Clinton, MS
Tele: 601-925-5258

ELECTRICAL

Watkins & O'Gwynn
Contact: Holden O'Gwynn, Jr., P.E.
4523 Office Park Drive
Jackson, MS 39206
Tele: 601-982-3313

CIVIL

Ford Engineering Services, PLLC
Contact: Joel Ford
2010 Oak Grove Road
Building 4, Suite 1
Hattiesburg, MS 39402
Tele: 601-264-7296

PROFESSIONAL SEALS

PROJECT TITLE

GS# 108-261

School of Nursing Building

University of Southern Mississippi
(Institutions of Higher Learning)
Hattiesburg, MS

ISSUE

MARK	DATE	DESCRIPTION
	02-21-14	CONSTRUCTION DOCUMENTS
	10.1.15	Revised per owner's requirements
	12.1.15	AV Bid Documents
	4.4.16	AV Bid Documents Rev1

MANAGEMENT

PROJECT NO:
PROJECT AREA:
CAD DWG FILE:
DRAWN BY:
CHECKED BY:

SHEET TITLE

FIRST FLOOR
LOUDSPEAKER PLAN
2 of 2

AV 2.4

IR	Control port, indicates connection to AV control server. Text indicates control type. Provide control server to accommodate all ports shown.
	Raceway j-box, pull box or plug box. Refer to plans for locations and box configuration. Indicates position where cabling enters or exits raceway system. Do not splice or terminate UON.
5	Lan port. Indicates connection to a LAN switch. Provide switches to accommodate all ports, refert to switch schedule.
M1	Panel connector. Refer to panel elevations. All connectors shall have unique numbering scheme. Submit all panel configurations.
	Audio patch point, half-normal configuration. Part of jack field system.
	Audio patch point, dead point configuration. Part of jack field system.
	Audio patch point, full normal configuration. Part of jack field system.
	Patch cable from field panel to devices. Shown only where field panels and end-user patching is employed. Terminate all cables.
	Patch cable from field panel to termination.

Data & Network Notes

1. Each network type is a stand-alone physical network.
2. Do not combine networks except where drawings indicate vLAN configurations.
3. Provide separate patch panels for each network type.
4. The term "Data" is also used on the drawings to indicate proprietary data transport conductors.
5. All references to "Data" and "D" define proprietary networks, but not necessarily the same network.
6. Follow the drawings carefully for proper configuration of network cabling requirements.
7. Where interface with house LAN infrastructure is required, coordinate with owner's IT staff.
8. Certify all stand alone cable plants for rated data rates.

Abbreviations

A Antenna or Antenna Connection Point
ACP Alternating Current (Power Distribution)
AFF Above Finished Floor
AIC Audio Input Card
AL Assisted Listening
AM Amplitude Modulation (AM Radio)
AOC Audio Output Card
AT Constant Voltage Attenuator
AV Audio Video Equipment Rack Panel
AVD Audio Video Distribution Unit
AV-DC Audio Video Output Card
AVI Audio Video Interface
AVSS Integrated AV Control Mixer/Switcher
BOS Breakout Box
BOC Breakout Interface Card
C Celsius
CN ColorNet
COMB Combiner
COMP Compressor
CP Control Panel or Control Point
CRT Cathode Ray Tube Display
CSM Control System Master
CSP Control System Port
CU Control Unit, sometimes used for Control Panels
DA Distribution Amplifier
DATA Proprietary or standard digital communications signal
DC Direct Current (Circuit Designator)
DEC Decoder
DSP DSP Signal Processor
DT Data Terminal
DV Digital Video
DVD Digital Video or Versatile Disc Player
E Ethernet
FA Fire Alarm
FB Foldback
FBK Foldback Rack Panel
FM Frequency Modulation (FM Radio)
F Fiber Optic
FS Filter Set
GPIO General Purpose Input/Output
H-LAN House LAN, Coordinate w/Owner
I/O Input/Output Interface
ICF Intermediate Distribution Frame
IR Infrared
IRE Infrared Emitter
ITG Integrated
INT Interface
J Junction or Junction Box
K Relay
L +4 dBu Connection Point
LER Local Equipment Rack
LAN Local Area Network
LCD Liquid Crystal Display
LIM Limiter
M Microphone Level Connection Point
MCS Master Control Server or System Controller
MIC Microphone (Mic Level)
ML Combined ML & +4 dBu Device
MLK Combined Mic & +4 dBu Rack Panel
MLS Combined Mic, Line and Speaker Level Device
MOD Modulator
MON Monitor
NETW Data network, interface or control transport, typically proprietary
NC Normally Closed or No Connection (Depends on Context)
NO Normally Open
OFE Owner Furnished Equipment
PA Power Amplifier
PTZ Pan/Tilt/Zoom Control Unit, Supply as required for specified camera, UON.
PJ Projector
PHJ Projector
PS Power Supply
QM Crestron Quick Media Transport (proprietary)
REC Record or recorder
RF Radio Frequency
RFDA Radio Frequency Distribution Unit
RFRX Radio Frequency Receiver
RFTX Radio Frequency Transmitter
RK Rack Mounted device
RKP Rack Panel
S Loudspeaker , Loudspeaker Connection Point or Physical Location
SC Video scan scaler/converter
SUM Mixer
TP Touch Panel
UON Unless Otherwise Noted
UPL Uplink
VC Volume Control
VD Visual or Video Display
X Switch
XO Crossover
Z Impedance

Projection
1. Coordinate installation of projection screen with General Contractor. Provide rough-in backbox for screen motor UON.
2. Coordination position, angles and lens parameters with the consultant.
3. Extend low voltage serial or GPIO control circuits to AV Control System, coordinate with consultant
4. Provide lens as required by the projection geometry shown. Verify with projector manufacturer.
5. Provide lens as required for the projection geometry shown on the plans and sections.
6. Provide low-voltage controls for all projections screens, locate as directed by owner and/or consultant.

Controls
1. Configure control server to accommodate all control ports shown, see control port schedule.
2. Provide applicable wireless gateway or other interfaces as required for wireless controls.
3. Provide local power for all devices under control, control clients and dedicated control panels/touch panels.
4. Where possible, power control panels and devices interface and transport units with Power Over Ethernet (POE). Provide additional power supply to support POE where required.
5. All control cabling shall be provided as recommended by the specified or approved control system manufacturer.
6. Provide UI clients for all systems, duplicate primary control interface for each client. UI clients shall be provided for Mac OS, Windows, Linux, iOS and Android devices. Verify and coordinate with owner.

Projection
1. Coordinate installation of projection screen with General Contractor. Provide rough-in backbox for screen motor UON.
2. Coordinate position, angles and lens parameters with the consultant.
3. Extend low voltage serial or GPIO control circuits to AV Control System, coordinate with consultant.
4. Provide lens as required by the projection geometry shown. Verify with projector manufacturer.
5. Provide lens as required for the projection geometry shown on the plans and sections.
6. Provide low-voltage controls for all projections screens, locate as directed by owner and/or consultant.

Signal Flow
1. Single line drawings, reconciled with the plans, constitute the design.
2. Wire numbers are shown for reference only. All cables shall be numbered. Contractor is free to use their own cable numbering scheme.
3. Single line drawings do not include minor supplemental items, accessories and cabling. Provide all required items to support the systems as drawn as recommended by the manufacturer or per AV best practice.
4. Configure LAN switches to support the ports shown on the single lines and applicable port schedules.

Loudspeaker Mounting
1. Provide cabling as reflected by single line drawings.
2. Pull cable through pull box, do not splice or use panel connectors. Amplifier circuit shall terminate directly to transducer UON.
3. Final adjustment of loudspeaker aiming and mouting configuration will be determined on-site during commissioning.
4. Obtain aiming coordinates from consultant. Provide rigging hardware that supports adjustment of all loudspeakers for 360 degrees of adjustment.
5. Provide lift, scaffolding and rigging kits required for loudspeaker mounting and adjustment. Ensure that all equipment is adjustable as to not impede loudspeaker dispersion during commissioning.
6. Refer to single line drawings for component callouts, circuiting and related signal processing requirements.
7. Attached to structure only, coordinate and/or obtain approval from Stucture Engineer.
8. Equipment shall be held firmly in place with proper mounting hardware, suspension or rigging materials. Equipment attached to any building structure, sub-structure or other load-bearing member shall be self-supporting. All mounting or rigging hardware shall be installed with a safety factor of at least three times the required load.
9. Provide 100% redundancy for all rigging attachment points, verify with Structural Engineer.
10. Provide bumpers, array brackets, dead-hang hardware, fasteners, safety equipment and other related mounting comonents as required by the loudspeaker manufacturer.
11. Use manufacturer's rigging hardware if available.

AV Cabling
1. All plenum wire shall meet applicable local codes.
2. Cable callouts shown on the single line drawings are for reference to the Basis of Design, however, all wire and cable shall be provided in accordance with the recommendations of the manufacturer for the connected equipment, UON.
3. All wiring shall be plenum rated except for wire installed in equipment racks, portable cables and wire installed in conduit or raceway systems.
4. Ensure and verify that all cables required for return air plenun spaces are compliant with local fire codes and/or the NFPA, whichever is more stringent.
5. Other equipment and/or component cables and conductors shall be constructed with stranded wire, shielded as required with the number of conductors and gauge required by the manufacturer for proper operation of the item supplied.
6. Verify all cable types during submittal with the AV Consultant.
7. Verify cable lengths with manufacturer of connected equipment for all cable types.
8. Wire and cable for any device, whether specifically listed herein, shown on the drawings or not, shall be supplied in accordance with the requirements of the device manufacturer and the National Electrical Code.
9. Wire, cable and signal conductors shall be new and unused.
10. All low level field cabling shall enter rack at punch points or directly soldered to terminating connector at equipment or terminal panel.
11. Buss punch block ground points to single rack ground, see jack field detail.
12. If power supply includes ground to AC connector, do not terminate signal ground.
13. Mechanically isolate all panel connectors from raceway system and finish plate.
14. Mechanically isolate connector chassis from rack panel. Pin 1 shall not be at the same potential as connector chassis or panel.
15. Mechanically isolate connector chassis from rack panel. Pin 1 shall not be at the same potential as connector chassis or panel at all audio outputs.
16. Mechanically isolate service entrance conduits from equipment rack.
17. Use #10AWG solid wire min. for all ground jumpers.
18. Certify all Ethernet cable runs for 1000MB operation, min., per specifications (Category 6 patching and interconnect).
19. Certify all proprietary cable runs per the manufacturer's recommendation (Category 6 patching and interconnect).
20. Isolate equipment rack from conduit, raceway and power distribution system.
21. Maintain proper twist ratio for all pairs (Category 6 patching and interconnect).
22. Terminate all pins and conductors (Category 6 patching and interconnect).
23. There shall be no ground loops, regardless of equipment configuration.
24. Use 3-wire grounded devices when possible.
25. Use only balanced audio terminations throughout system, U.O.N.
26. Use only ratchet type crimp tools. The presence of a non-ratchet crimp tool on the job site shall render all connections suspect (Category 6 patching and interconnect).
27. Use only standard wiring and active devices, do not use crossover cables unless specifically noted on the drawings (Category 6 patching and interconnect).
28. Use pre-made (manufactured) cables whenever possible (Category 6 patching and interconnect).
29. Constant voltage loudspeaker cable: Belden 8473, West Penn 200 Series or equal, UON.
30. Data UTP, installed in conduit: Belden 7881A or equal, UON.
31. Data UTP, plenum rated: Belden 7882A or equal, UON.
32. Direct coupled loudspeaker wire (voice coil terminated): THHN as shown on the drawings or West Penn 200 Series, UON.
33. GPIO Control Cable, DC Power, 2 conductor: Belden 8461 or equal, UON.
34. Low-level audio cable, installed in conduit: Belden 8761 or equal by West Penn, UON.
35. Low-level audio cable, installed in plenum: Belden 88761 or equal by West Penn, UON.
36. RF Transmission Cable: Belden 7810A or equal, UON.
37. SDI video, extended length, installed in conduit: Belden 7731A or equal, UON.
38. SDI video, inter-rack or IDF: Belden 1855A or equal, UON.
39. SDI video, long length, installed in conduit: Belden 1694A or equal, UON.
40. SDI video, short length, installed in conduit: Belden 1505A or equal, UON.

Note that the proejct is under construction and most areas are at the final stages of completion. The AV Contractor will be required to mount devices in finished, or near finished ceilings. Coordinate this work with the General Contractor and provide all required mounting systems required. All exposed hardware, mounts, grilles, etc. shall be painted as directed by the architect.

Gracenote Consulting, Inc.
Consultants in Acoustics & Audio Visual Technology

PO Box 3342
Meridian MS 39303

V: 601.207.0510
F: 601.500.5330

http:/www.gracenoteconsulting.com

These drawings and their associated specifications, ideas, concepts, arrangements, designs and layouts are, and shall remain the property of the architect and consultant and no part thereof shall be copied, disclosed or distributed to any other party, or used in connection with any work or project other than the specific work as noted on these drawings without the express written permission of the consultant. Visual contact with these drawings or specifications or any other intellectual propery associated with the project shall constitute acceptance of this policy. © Copyright Gracenote Consulting, Inc.

STUDIO SOUTH
ARCHITECTS, PLLC

in association with

Eley Associates / Architects, P.A.

628 Washington Avenue, Suite C
Ocean Springs, MS 39564
228-762-8575 fax 769-9545

CONSULTANTS

STRUCTURAL

Structural Design Group
Contact: Thomas C. Schaeffer, P.E.
220 Great Circle Road Suite 106
Nashville, TN 37228
Tele: 615-255-5537

MECHANICAL

Eldridge & Associates, P.A.
Contact: Jimmy W. Eldridge, P.E.
604 HWY. 80 West Suite U
Clinton, MS
Tele: 601-925-5258

ELECTRICAL

Watkins & O'Gwynn
Contact: Holden O'Gwynn, Jr., P.E.
4523 Office Park Drive
Jackson, MS 39206
Tele: 601-982-3313

CIVIL

Ford Engineering Services, PLLC
Contact: Joel Ford
2010 Oak Grove Road
Building 4, Suite 1
Hattiesburg, MS 39402
Tele: 601-264-7296

PROFESSIONAL SEALS

PROJECT TITLE

GS# 108-261

School of Nursing Building

University of Southern Mississippi
(Institutions of Higher Learning)

Hattiesburg, MS

ISSUE

MARK	DATE	DESCRIPTION
	02-21-14	CONSTRUCTION DOCUMENTS
	10.1.15	Revised per owner's requirements
	12.1.15	AV Bid Documents
	4.4.16	AV Bid Documents Rev1

MANAGEMENT

PROJECT NO:
PROJECT AREA:
CAD DWG FILE:
DRAWN BY:
CHECKED BY:

SHEET TITLE

AV SYSTEMS NOTES

AV 3.0

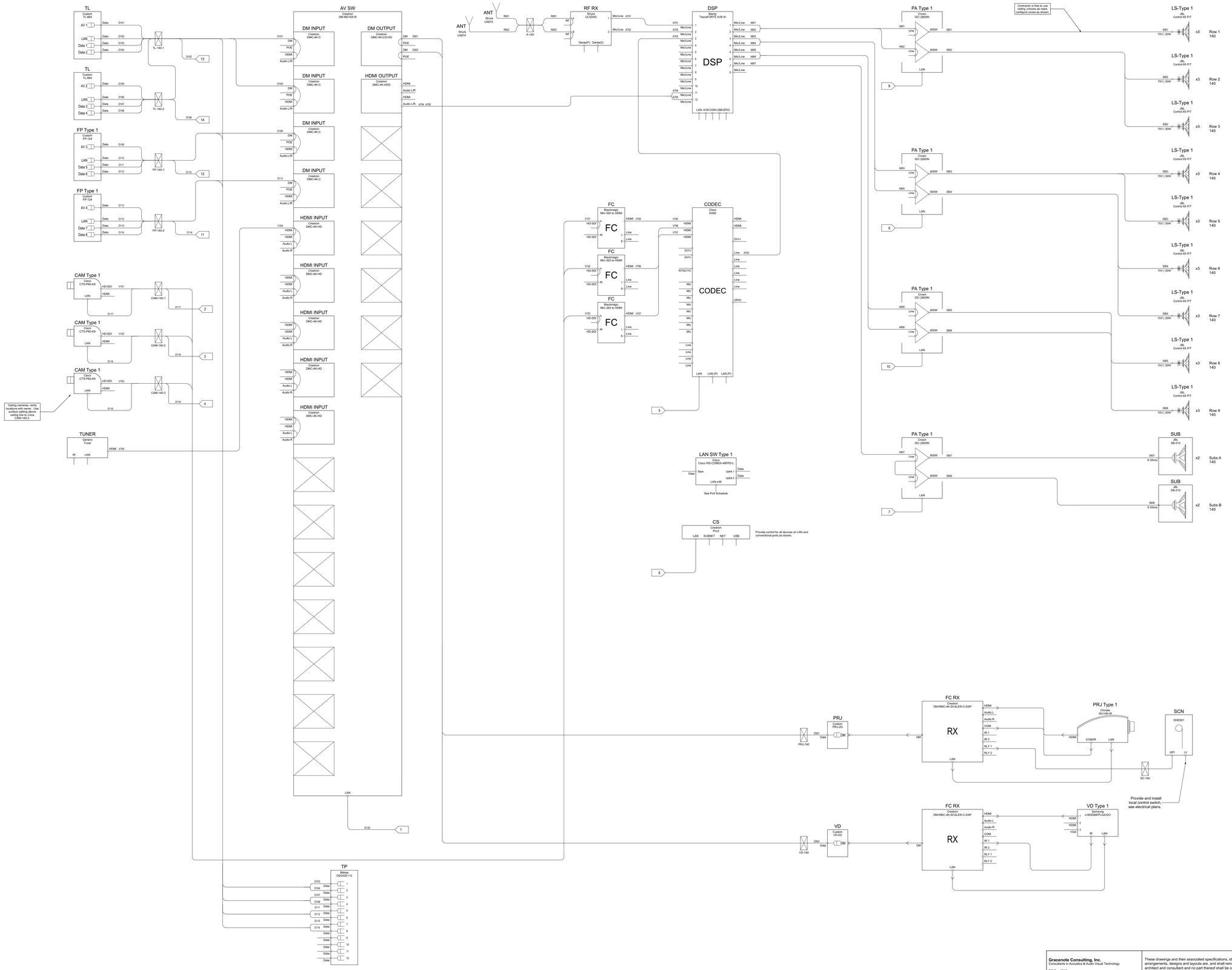

STUDIO SOUTH
ARCHITECTS, PLLC

in association with

Eley Associates / Architects, P.A.

628 Washington Avenue, Suite C
Ocean Springs, MS 39564
228-762-8575 fax 769-9545

CONSULTANTS

STRUCTURAL

Structural Design Group
Contact: Thomas C. Schaeffer, P.E.
220 Great Circle Road Suite 106
Nashville, TN 37228
Tele: 615-255-5537

MECHANICAL

Eldridge & Associates, P.A.
Contact: Jimmy W. Eldridge, P.E.
604 HWY. 80 West Suite U
Clinton, MS
Tele: 601-925-5258

ELECTRICAL

Watkins & O'Gwynn
Contact: Holden O'Gwynn, Jr., P.E.
4523 Office Park Drive
Jackson, MS 39206
Tele: 601-982-3313

CIVIL

Ford Engineering Services, PLLC
Contact: Joel Ford
2010 Oak Grove Road
Building 4, Suite 1
Hattiesburg, MS 39402
Tele: 601-264-7296

PROFESSIONAL SEALS

PROJECT TITLE

GS# 108-261

School of Nursing Building

University of Southern Mississippi
(Institutions of Higher Learning)
Hattiesburg, MS

ISSUE

MARK	DATE	DESCRIPTION
	02-21-14	CONSTRUCTION DOCUMENTS
	10.1.15	Revised per owner's requirements
	12.1.15	AV Bid Documents
	4.4.16	AV Bid Documents Rev1

MANAGEMENT

PROJECT NO:
PROJECT AREA:
CAD DWG FILE:
DRAWN BY:
CHECKED BY:

SHEET TITLE

LECTURE HALL 140
SINLE LINE

AV 3.1

Gracenote Consulting, Inc.
Consultants in Acoustics & Audio Visual Technology

PO Box 3342
Meridian MS 39303

V: 601.207.0510
F: 601.500.5330

http://www.gracenoteconsulting.com

These drawings and their associated specifications, ideas, concepts, arrangements, designs and layouts are, and shall remain the property of the architect and consultant and no part thereof shall be copied, disclosed or distributed to any other party, or used in connection with any work or project other than the specific work as noted on these drawings without the express written permission of the consultant. Visual contact with these drawings or specifications or any other intellectual propery associated with the project shall constitute acceptance of this policy. © Copyright Gracenote Consulting, Inc.

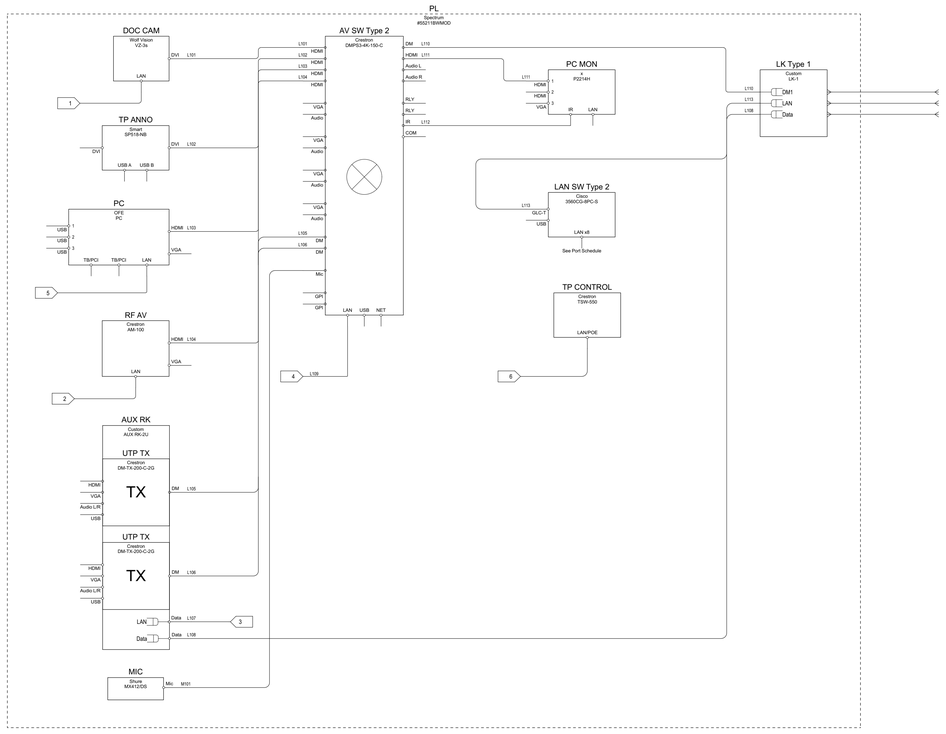

Cable Schedule

Number	Signal Type	Origin	Destination	Wire Type	Termination
A701	Line	RF RX	DSP	West Penn 452	XLR, Euro
A702	Line	RF RX	DSP	West Penn 452	XLR, Euro
A703	Line	Codec	DSP	West Penn 452	Euro
A704	Line	AV SW	DSP	West Penn 452	Euro
A705	Line	AV SW	DSP	West Penn 452	Euro
A801	LINE	DSP	PA	West Penn 452	Euro
A802	LINE	DSP	PA	West Penn 452	Euro
A803	LINE	DSP	PA	West Penn 452	Euro
A804	LINE	DSP	PA	West Penn 452	Euro
A805	LINE	DSP	PA	West Penn 452	Euro
A806	LINE	DSP	PA	West Penn 452	Euro
A807	LINE	DSP	PA	West Penn 452	Euro
D101	Crestron DM	TL	AV SW	As recommended by n	RJ45
D102	Ethernet	TL	LAN SW	West Penn 4246AF	RJ45
D103	Generic Data	TL	TP	West Penn 4246AF	XLR
D104	Generic Data	TL	TP	West Penn 4246AF	RJ45
D105	Crestron DM	TL	AV SW	As recommended by n	RJ45
D106	Ethernet	TL	LAN SW	As recommended by n	RJ45
D107	Generic Data	TL	TP	West Penn 4246AF	XLR
D108	Generic Data	TL	TP	West Penn 4246AF	RJ45
D109	Crestron DM	FP	AV SW	As recommended by n	RJ45
D110	Ethernet	FP	LAN SW	As recommended by n	RJ45
D111	Generic Data	FP	TP	West Penn 4246AF	XLR
D112	Generic Data	FP	TP	West Penn 4246AF	RJ45
D113	Crestron DM	FP	AV SW	As recommended by n	RJ45
D114	Ethernet	FP	LAN SW	As recommended by n	RJ45
D115	Generic Data	FP	TP	West Penn 4246AF	XLR
D116	Generic Data	FP	TP	West Penn 4246AF	RJ45
D117	Ethernet	FP	LAN SW	As recommended by n	RJ45
D118	Ethernet	FP	LAN SW	As recommended by n	RJ45
D119	Ethernet	FP	LAN SW	As recommended by n	RJ45
D120	Ethernet	AV SW	LAN SW	As recommended by n	RJ45
D501	Crestron DM	AV SW	UTP RX	As recommended by n	RJ45
D502	Crestron DM	AV SW	UTP RX	As recommended by n	RJ45
L101	DVI/HDMI	DOC CAM	AV SW	HDMI	DVI Adapter, HDMI
L102	DVI/HDMI	TP ANNO	AV SW	HDMI	DVI Adapter, HDMI
L103	HDMI	PC	AV SW	HDMI	HDMI
L104	HDMI	RF AV	AV SW	HDMI	HDMI
L105	DM	UTP TX	AV SW	DM	RJ45
L106	DM	UTP TX	AV SW	DM	RJ45
L107	LAN	AUX RK	LAN SW Type 2	CAT6	RJ45
L108	Data	AUX RK	LK-1	CAT6	RJ45
L109	LAN	AV SW Type 2	LAN SW Type 2	CAT6	RJ45
L110	DM	AV SW Type 2	LK-1	DM	RJ45
L111	HDMI	AV SW Type 2	VD Type 2	HDMI	HDMI
L112	IR Control	AV SW Type 2	VD Type 2	3-cond stranded, 20AW	Euro/Screw
L113	LAN	LAN SWY Type 2	LK-1	CAT6	RJ45
M101	Mic Level Audio	MIC	LAN SW Type 2	WP452	XLR
R601	RF	ANT	RF RX	RG6	BNC
R602	RF	ANT	RF RX	RG6	BNC
S901	70V	PA Type 1	LS Type 1	West Penn 225	Solder, Crimp
S902	70V	PA Type 1	LS Type 1	West Penn 225	Solder, Crimp
S903	70V	PA Type 1	LS Type 1	West Penn 225	Solder, Crimp
S904	70V	PA Type 1	LS Type 1	West Penn 225	Solder, Crimp
S905	70V	PA Type 1	LS Type 1	West Penn 225	Solder, Crimp
S906	70V	PA Type 1	LS Type 1	West Penn 225	Solder, Crimp
S907	70V	PA Type 1	LS Type 1	West Penn 225	Solder, Crimp
S908	70V	PA Type 1	LS Type 1	West Penn 225	Solder, Crimp
V101	HD-SDI	CAM	Codec	Belden 1694A	RJ45
V102	HD-SDI	CAM	Codec	Belden 1694A	RJ45
V103	HD-SDI	CAM	Codec	Belden 1694A	RJ45
V104	HDMI	Tuner	AV SW	HDMI	HDMI
V705	HDMI	FC	Codec	HDMI	HDMI
V706	HDMI	FC	Codec	HDMI	HDMI
V707	HDMI	FC	Codec	HDMI	HDMI

Equipment Schedule (provided for reference only. Refer to single line drawings, plans and specifications for contract requirements).

Designator	Manufacturer	Model	System	Location	Rack	Scope	Note
ANT	Shure	UA874	Microphones	See plans	NA	AV	Provide mounts and cabling as required by the manufacturer.
AUX RK	Custom	AUX RK-2U	AV	Lecture Hall 140	Lectern	AV	
AV SW	Crestron	DM-MD16X16				AV/OFE	
AV SW Type 2	Crestron	DMPS3-4K-150-C				AV	
CAM Type 1	Cisco	CTS-P60-K9	AV			AV	Provide power supply.
CODEC	Cisco	SX80	AV			AV/OFE	
CS	Crestron	Pro3	Control			AV	Terminate control circuits as shown, refer to control tags, see control schedule.
DM INPUT	Crestron	DMC-4K-C	Video			AV	Provide DM-PSU where required, see connected input sources.
DM OUTPUT	Crestron	DMC-4K-CO-HD				AV	
DOC CAM	Wolf Vision	VZ-3s	Presentation	Lectern	NA	AV	Provide DVI/HDMI adapter as recommended by the manufacturer.
DSP	Biamp	TesiraFORTÉ AVB AI	Audio			AV	
FC	Blackmagic	Mini SDI to HDMI	Video	MDF	NA	AV	Mount back of rack.
FC RX	Crestron	DM-RMC-4K-SCALER-C-DS	Projection	Ceiling	NA	AV	Mount at projector, verify location.
FP Type 1	Custom	FP-124	Panels	Lecture Hall	NA	AV	
HDMI INPUT	Crestron	DMC-4K-HD	Video			AV	
HDMI OUTPUT	Crestron	DMC-4K-HDO				AV	
LAN SW Type 1	Cisco	Cisco WS-C2960X-48FPD-L	LAN	MDF	MDF	AV	
LAN SW Type 2	Cisco	3560CG-8PC-S	Network			AV	Provide 1- GLC-T Module
LK Type 1	Custom	LK-1	Panels	Lectern		AV	See Panel Elevation
LS-Type 1	JBL	Control 65 P/T				AV	
MIC	Shure	MX412/DS	Microphones	Podium		AV/OFE	
PA Type 1	Crown	DCi 2|600N			MDF	AV/OFE	
PC	OFE	PC	Presentation	Podium		OFE	Verify configuration with owner, terminate video as required.
PC MON	x	P2214H	Displays	Lectern	NA	AV	
PL	Spectrum	#55211BWMOD	Frames			AV	Grey with Cherry Trim, provide left side flip-up Shelf Part #55219, submit for approval prior to procurement.
PRJ	Custom	PRJ-2G	Field Panels	Ceiling	NA	AV	
PRJ Type 1	Christie	WU14K-M	Projection	Lecture Hall 140	NA	AV	Provide lens to meet the projection geometry, see plans.
RF AV	Crestron	AM-100	Presentation	Podium		AV/OFE	
RF RX	Shure	ULXD4D	Microphones	MDF	MDF	AV	Provide remote antennae at locations shown on plans. Provide the following Shure accessories: ULXD1, ULXD2 transmitter (2 ea), SB900 battery (4), SBC200 Charging Station (2), MX150 Lavalier (2), Countryman E6 (2).
SCN	Draper	Access XL/V	Projection	Lecture Hall 140	NA	AV	Provide low-voltage control interface module as required to support dry contact wall switch and AV control system interface. See electrical plans. Refer to Draper Quote# 507286- 001.
SUB	JBL	SB-210		Suspend from ceiling		AV	Provide bracket and rigging hardware as required, suspend above ceiling clouds.
TL	Custom	TL-664	Panels	Lecture Hall	NA	AV	
TP	Bittree	DSGIGE112	Infrastructure	MDF		AV	Provide 12- 18" CAT6 patch cables, black.
TP ANNO	Smart	SP518-NB	Presentation	Podium	Podium	AV/OFE	
TP CONTROL	Crestron	TSW-550	Control	Lectern	NA	AV	Provide TSW-550-TTK table top kit, verify finish with owner.
TUNER	Generic	Tuner	Program			AV/OFE	Coordinate procurement with CATV vendor.
UTP TX	Crestron	DM-TX-200-C-2G	AV			AV	Power over DM, or provide power supply.
VD	Custom	VD-2G	Field Panels	Side Wall	NA	AV	
VD Type 1	Samsung	LH65DMEPLGA/GO	Displays	Lecture Hall 140	NA	Display	Provide bracket and support hardware as required.

LAN Port & Switch Schedule

Switch#	Switch Product	Port#	Connected To	Cable	Provided By	Installed By
LAN SW Type 1	Cisco WS-C2960X-48FPD-L	1	AV SW	CAT6	AV Contractor	AV Contractor
LAN SW Type 1	Cisco WS-C2960X-48FPD-L	2	CAM Type 1	CAT6	AV Contractor	AV Contractor
LAN SW Type 1	Cisco WS-C2960X-48FPD-L	3	CAM Type 1	CAT6	AV Contractor	AV Contractor
LAN SW Type 1	Cisco WS-C2960X-48FPD-L	4	CAM Type 1	CAT6	AV Contractor	AV Contractor
LAN SW Type 1	Cisco WS-C2960X-48FPD-L	5	Codec	CAT6	AV Contractor	AV Contractor
LAN SW Type 1	Cisco WS-C2960X-48FPD-L	6	CS	CAT6	AV Contractor	AV Contractor
LAN SW Type 1	Cisco WS-C2960X-48FPD-L	7	PA, Subs B, C	CAT6	AV Contractor	AV Contractor
LAN SW Type 1	Cisco WS-C2960X-48FPD-L	8	PA, Zones A, B	CAT6	AV Contractor	AV Contractor
LAN SW Type 1	Cisco WS-C2960X-48FPD-L	9	PA, Zones C, D	CAT6	AV Contractor	AV Contractor
LAN SW Type 1	Cisco WS-C2960X-48FPD-L	10	PA, Zones E, F	CAT6	AV Contractor	AV Contractor
LAN SW Type 1	Cisco WS-C2960X-48FPD-L	11	TL	CAT6	AV Contractor	AV Contractor
LAN SW Type 1	Cisco WS-C2960X-48FPD-L	12	TL	CAT6	AV Contractor	AV Contractor
LAN SW Type 1	Cisco WS-C2960X-48FPD-L	13	TL	CAT6	AV Contractor	AV Contractor
LAN SW Type 1	Cisco WS-C2960X-48FPD-L	14	TL	CAT6	AV Contractor	AV Contractor
LAN SW Type 2	Cisco WS-C3560CX-8PC-S with (1) one GLC-T= (mini-GBIC)	1	Projector RX	CAT6	AV Contractor	AV Contractor
LAN SW Type 2	Cisco WS-C3560CX-8PC-S with (1) one GLC-T= (mini-GBIC)	2	Projector RX	CAT6	AV Contractor	AV Contractor
LAN SW Type 2	Cisco WS-C3560CX-8PC-S with (1) one GLC-T= (mini-GBIC)	3	Projector RX	CAT6	AV Contractor	AV Contractor
LAN SW Type 2	Cisco WS-C3560CX-8PC-S with (1) one GLC-T= (mini-GBIC)	4	Projector RX	CAT6	AV Contractor	AV Contractor
LAN SW Type 2	Cisco WS-C3560CX-8PC-S with (1) one GLC-T= (mini-GBIC)	5	Projector RX	CAT6	AV Contractor	AV Contractor
LAN SW Type 2	Cisco WS-C3560CX-8PC-S with (1) one GLC-T= (mini-GBIC)	6	TP CONTROL	CAT6	AV Contractor	AV Contractor

STUDIO SOUTH
ARCHITECTS, PLLC

in association with
Eley Associates / Architects, P.A.

628 Washington Avenue, Suite C
Ocean Springs, MS 39564
228-762-8575 fax 769-9545

CONSULTANTS

STRUCTURAL

Structural Design Group
Contact: Thomas C. Schaeffer, P.E.
220 Great Circle Road Suite 106
Nashville, TN 37228
Tele: 615-255-5537

MECHANICAL

Eldridge & Associates, P.A.
Contact: Jimmy W. Eldridge, P.E.
604 HWY. 80 West Suite U
Clinton, MS
Tele: 601-925-5258

ELECTRICAL

Watkins & O'Gwynn
Contact: Holden O'Gwynn, Jr., P.E.
4523 Office Park Drive
Jackson, MS 39206
Tele: 601-982-3313

CIVIL

Ford Engineering Services, PLLC
Contact: Joel Ford
2010 Oak Grove Road
Building 4, Suite 1
Hattiesburg, MS 39402
Tele: 601-264-7296

PROFESSIONAL SEALS

PROJECT TITLE

GS# 108-261

School of Nursing Building

University of Southern Mississippi
(Institutions of Higher Learning)
Hattiesburg, MS

ISSUE

MARK	DATE	DESCRIPTION
	02-21-14	CONSTRUCTION DOCUMENTS
	10.1.15	Revised per owner's requirements
	12.1.15	AV Bid Documents
	4.4.16	AV Bid Documents Rev1

MANAGEMENT

PROJECT NO:
PROJECT AREA:
CAD DWG FILE:
DRAWN BY:
CHECKED BY:

SHEET TITLE

LECTURE HALL 140
LECTERN SINLE LINE, SCHEDULES

AV 3.2

Gracenote Consulting, Inc.
Consultants in Acoustics & Audio Visual Technology

PO Box 3342
Meridian MS 39303

V: 601.207.0510
F: 601.500.5330

http://www.gracenoteconsulting.com

These drawings and their associated specifications, ideas, concepts, arrangements, designs and layouts are, and shall remain the property of the architect and consultant and no part thereof shall be copied, disclosed or distributed to any other party, or used in connection with any work or project other than the specific work as noted on these drawings without the express written permission of the consultant. Visual contact with these drawings or specifications or any other intellectual propery associated with the project shall constitute acceptance of this policy. © Copyright Gracenote Consulting, Inc.

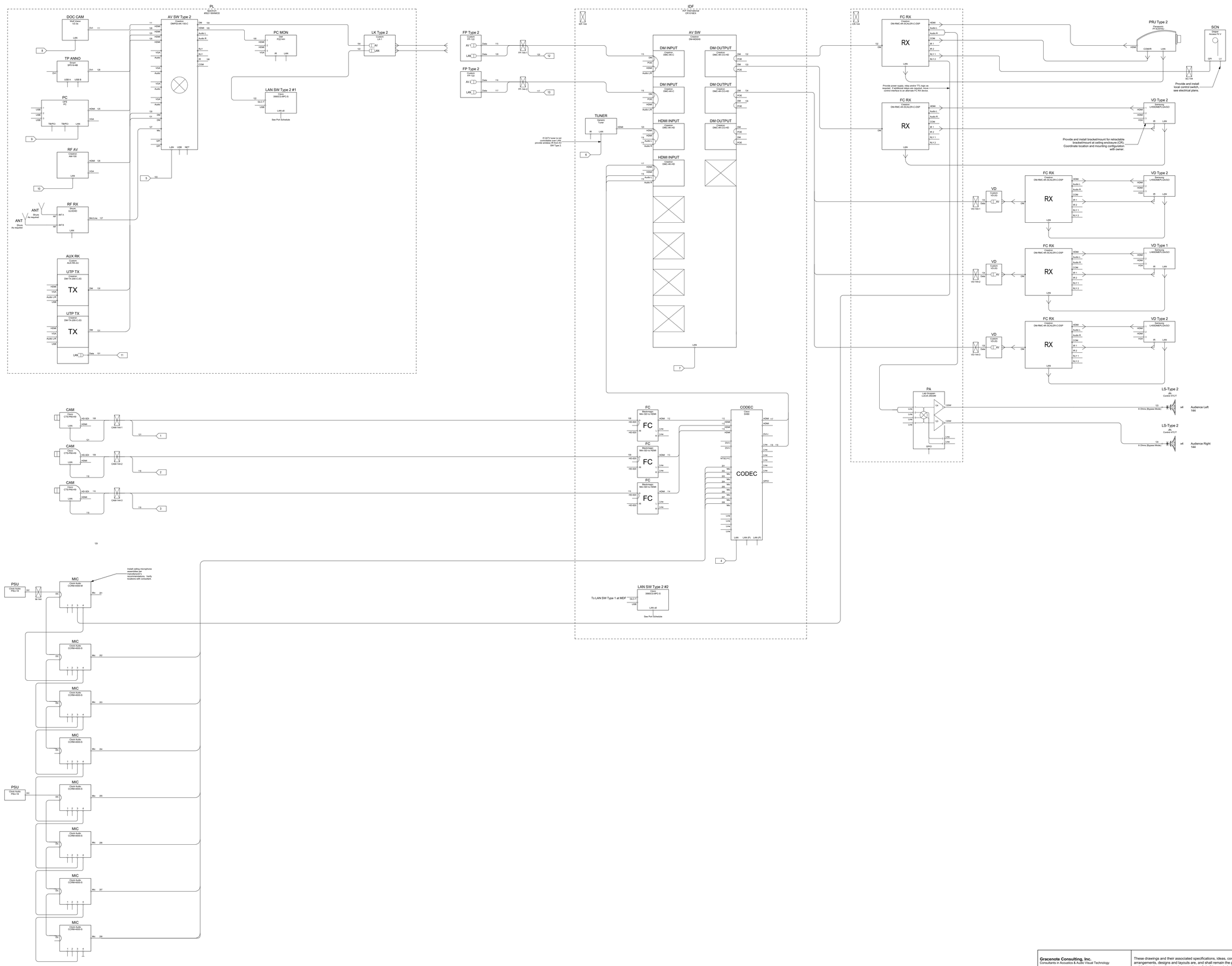

STUDIO SOUTH
ARCHITECTS, PLLC

in association with

Eley Associates / Architects, P.A.

628 Washington Avenue, Suite C
Ocean Springs, MS 39564
228-762-8575 fax 769-9545

CONSULTANTS

STRUCTURAL

Structural Design Group
Contact: Thomas C. Schaeffer, P.E.
220 Great Circle Road Suite 106
Nashville, TN 37228
Tele: 615-255-5537

MECHANICAL

Eldridge & Associates, P.A.
Contact: Jimmy W. Eldridge, P.E.
604 HWY. 80 West Suite U
Clinton, MS
Tele: 601-925-5258

ELECTRICAL

Watkins & O'Gwynn
Contact: Holden O'Gwynn, Jr., P.E.
4523 Office Park Drive
Jackson, MS 39206
Tele: 601-982-3313

CIVIL

Ford Engineering Services, PLLC
Contact: Joel Ford
2010 Oak Grove Road
Building 4, Suite 1
Hattiesburg, MS 39402
Tele: 601-264-7296

PROFESSIONAL SEALS

PROJECT TITLE

GS# 108-261

School of Nursing Building

University of Southern Mississippi
(Institutions of Higher Learning)
Hattiesburg, MS

ISSUE

MARK	DATE	DESCRIPTION
	02-21-14	CONSTRUCTION DOCUMENTS
	10.1.15	Revised per owner's requirements
	12.1.15	AV Bid Documents
	4.4.16	AV Bid Documents Rev1

MANAGEMENT

PROJECT NO:
PROJECT AREA:
CAD DWG FILE:
DRAWN BY:
CHECKED BY:

SHEET TITLE

LARGE CLASSROM 144
SINLE LINE

AV 3.3

Gracenote Consulting, Inc.
Consultants in Acoustics & Audio Visual Technology

PO Box 3342
Meridian MS 39303

V: 601.207.0510
F: 601.500.5330

http://www.gracenoteconsulting.com

These drawings and their associated specifications, ideas, concepts, arrangements, designs and layouts are, and shall remain the property of the architect and consultant and no part thereof shall be copied, disclosed or distributed to any other party, or used in connection with any work or project other than the specific work as noted on these drawings without the express written permission of the consultant. Visual contact with these drawings or specifications or any other intellectual propery associated with the project shall constitute acceptance of this policy. © Copyright Gracenote Consulting, Inc.

Cable Schedule

Number	Signal Type	Origin	Destination	Wire Type	Termination
119	---	---	---	---	---
118	---	---	---	---	---
117	---	---	---	---	---
101	LAN	AUX RK	LAN SW Type 2	CAT6	RJ45
103	LAN	AV SW Type 2	LAN SW Type 2	CAT6	RJ45
120	---	---	---	---	---
104	DM	AV SW Type 2	LK-1	DM	RJ45
106	IR Control	AV SW Type 2	VD Type 2	3-cond stranded, 20AV	Euro/Screw
105	HDMI	AV SW Type 2	VD Type 2	HDMI	HDMI
108	HD-SDI	CAM	FC	Belden 1694A	RJ45
110	HD-SDI	CAM	FC	Belden 1694A	RJ45
109	HD-SDI	CAM	FC	Belden 1694A	RJ45
132	DM	DM OUTPUT	FC RX	DM	RJ45
133	DM	DM OUTPUT	FC RX	DM	RJ45
135	DM	DM OUTPUT	FC RX	DM	RJ45
134	DM	DM OUTPUT	FC RX	DM	RJ45
111	DVI/HDMI	DOC CAM	AV SW	HDMI	DVI Adapter, HDMI
114	HDMI	FC	Codec	HDMI	HDMI
113	HDMI	FC	Codec	HDMI	HDMI
112	HDMI	FC	Codec	HDMI	HDMI
116	Crestron DM	FP	AV SW	As recommended by n	RJ45
121	Ethernet	FP	LAN SW	As recommended by n	RJ45
115	Crestron DM	FP	AV SW	As recommended by n	RJ45
122	LAN	LAN SWY Type 2	LK-1	CAT6	RJ45
208	Mic	MIC	Codec	West Penn 452	XLR, Euro
203	Mic	MIC	Codec	West Penn 452	XLR, Euro
202	Mic	MIC	Codec	West Penn 452	XLR, Euro
205	Mic	MIC	Codec	West Penn 452	XLR, Euro
206	Mic	MIC	Codec	West Penn 452	XLR, Euro
204	Mic	MIC	Codec	West Penn 452	XLR, Euro
201	Mic	MIC	Codec	West Penn 452	XLR, Euro
207	Mic	MIC	Codec	West Penn 452	XLR, Euro
123	Spkr	PA Type 1	LS Type 1	West Penn 225	Solder, Crimp
124	Spkr	PA Type 1	LS Type 1	West Penn 225	Solder, Crimp
125	HDMI	PC	AV SW	HDMI	HDMI
126	HDMI	RF AV	AV SW	HDMI	HDMI
127	HDMI	RF AV	AV SW	HDMI	HDMI
128	DVI/HDMI	TP ANNO	AV SW	HDMI	DVI Adapter, HDMI
129	HDMI	Tuner	AV SW	HDMI	HDMI
131	DM	UTP TX	AV SW	DM	RJ45
130	DM	UTP TX	AV SW	DM	RJ45

Equipment Schedule (provided for reference only. Refer to single line drawings, plans and specifications for contract requirements).

Designator	Manufacturer	Model	System	Location	Rack	Scope	Note
ANT	Shure	As required	Microphones	Lectern Rack	NA	AV	Provide mounts and cabling as required by the manufacturer.
AUX RK	Custom	AUX RK-2U	AV	Lectern	Lectern	AV	
AV SW	Crestron	DM-MD8X8				AV/OFE	
AV SW Type 2	Crestron	DMPS3-4K-150-C				AV	
CAM	Cisco	CTS-P60-K9	AV			AV	Provide power supply.
CODEC	Cisco	SX80	AV			AV/OFE	
DM INPUT	Crestron	DMC-4K-C	Video			AV	Provide DM-PSU where required, see connected input sources.
DM OUTPUT	Crestron	DMC-4K-CO-HD				AV	
DOC CAM	Wolf Vision	VZ-3s	Presentation	Lectern	NA	AV	Provide DVI/HDMI adapter as recommended by the manufacturer.
FC	Blackmagic	Mini SDI to HDMI	Video	MDF	NA	AV	Mount back of rack.
FC RX	Crestron	DM-RMC-4K-SCALER-C-DS	Projection	Ceiling	NA	AV	Mount at projector, verify location.
FP Type 2	Custom	FP-122	Panels	Floor	NA	AV	
HDMI INPUT	Crestron	DMC-4K-HD	Video			AV	
IDF	AVF International	CR1016EX	Racks	IDF		AV	
LK Type 2	Custom	LK-1	Panels	Lectern		AV	See Panel Elevation
LS-Type 2	JBL	Control 47C/T				AV	
MIC	Clock Audio	CCRM-4000-M	Microhones	Ceiling		AV	Provide power supply, configure control I/O as required by manufacturer. Verify suspension height with consultant.
MIC	Clock Audio	CCRM-4000-S	Microhones	Ceiling		AV	Provide power supply, configure control I/O as required by manufacturer. Verify suspension height with consultant.
PA	Lab Gruppen	LUCIA 240/2M	Audio			AV	
PC	OFE	PC	Presentation	Podium		OFE	Verify configuration with owner, terminate video as required.
PC MON	Dell	P2214H	Displays	Lectern	NA	AV	
PL	Spectrum	#55211BWMOD	Frames			AV	Grey with Cherry Trim, provide left side flip-up Shelf Part #55219, submit for approval prior to procurement.
PRJ Type 2	Panasonic	PT-EZ570U	Projection	Flush ceiling	NA	AV	Provide lens to meet the projection geometry, see plans.
PSU	Clock Audio	PSU-18				AV/OFE	Provide as required by manufacturer.
RF AV	Crestron	AM-100	Presentation	Podium		AV/OFE	
RF RX	Shure	ULXD4	Microphones	MDF	MDF	AV	Provide remote antennae at locations shown on plans. Provide the following Shure accessories: ULXD1, ULXD2 transmitter, SB900 battery (2), SBC200 Charging Station, MX150 Lavalier, Countryman E6.
SCN	Draper	Access Fit V	Projection	Screen Wall	NA	AV	Provide low-voltage control interface module as required to support dry contact wall switch and AV control system interface. See electrical plans. Refer to Draper Quote# 507286- 002.
TP ANNO	Smart	SP518-NB	Presentation	Podium	Podium	AV/OFE	
TUNER	Generic	Tuner	Program			AV/OFE	Coordinate procurement with CATV vendor.
UTP TX	Crestron	DM-TX-200-C-2G	AV			AV	Power over DM, or provide power supply.
---	Cisco	3560CG-8PC-S	Network			AV	Provide 1- GLC-T Module
VD	Custom	VD-2G	Field Panels	Side Wall	NA	AV	
VD Type 1	Samsung	LH65DMEPLGA/GO	Displays	Side Wall	NA	Display	Provide bracket and support hardware as required.
VD Type 2	Samsung	LH55DMEPLGA/GO	Displays	Side Wall	NA	Display	Provide bracket and support hardware as required.

LAN Port & Switch Schedule

Switch	Cisco WS-C3560CX Series with (1) one GLC-T= (mini-GBIC)	
Port#	**Connected To**	**Cable**
1	CAM	CAT6
2	CAM	CAT6
3	CAM	CAT6
4	Codec	CAT6
5	AV SW Type 2	CAT6
6	Tuner	CAT6
7	AV SW	CAT6
8	DOC CAM	CAT6
9	PC	CAT6
10	RF AX	CAT6
11	AUX RK	CAT6
12	FP-144-1	CAT6
13	FP-144-2	CAT6

STUDIO SOUTH
ARCHITECTS, PLLC

in association with

Eley Associates / Architects, P.A.

628 Washington Avenue, Suite C
Ocean Springs, MS 39564
228-762-8575 fax 769-9545

CONSULTANTS

STRUCTURAL

Structural Design Group
Contact: Thomas C. Schaeffer, P.E.
220 Great Circle Road Suite 106
Nashville, TN 37228
Tele: 615-255-5537

MECHANICAL

Eldridge & Associates, P.A.
Contact: Jimmy W. Eldridge, P.E.
604 HWY. 80 West Suite U
Clinton, MS
Tele: 601-925-5258

ELECTRICAL

Watkins & O'Gwynn
Contact: Holden O'Gwynn, Jr., P.E.
4523 Office Park Drive
Jackson, MS 39206
Tele: 601-982-3313

CIVIL

Ford Engineering Services, PLLC
Contact: Joel Ford
2010 Oak Grove Road
Building 4, Suite 1
Hattiesburg, MS 39402
Tele: 601-264-7296

PROFESSIONAL SEALS

PROJECT TITLE

GS# 108-261

School of Nursing Building

University of Southern Mississippi
(Institutions of Higher Learning)
Hattiesburg, MS

ISSUE

MARK	DATE	DESCRIPTION
	02-21-14	CONSTRUCTION DOCUMENTS
	10.1.15	Revised per owner's requirements
	12.1.15	AV Bid Documents
	4.4.16	AV Bid Documents Rev1

MANAGEMENT

PROJECT NO:
PROJECT AREA:
CAD DWG FILE:
DRAWN BY:
CHECKED BY:

SHEET TITLE

LARGE CLASSROOM 144
SCHEDULES

AV 3.4

Gracenote Consulting, Inc.
Consultants in Acoustics & Audio Visual Technology

PO Box 3342
Meridian MS 39303

V: 601.207.0510
F: 601.500.5330

http://www.gracenoteconsulting.com

These drawings and their associated specifications, ideas, concepts, arrangements, designs and layouts are, and shall remain the property of the architect and consultant and no part thereof shall be copied, disclosed or distributed to any other party, or used in connection with any work or project other than the specific work as noted on these drawings without the express written permission of the consultant. Visual contact with these drawings or specifications or any other intellectual propery associated with the project shall constitute acceptance of this policy. © Copyright Gracenote Consulting, Inc.

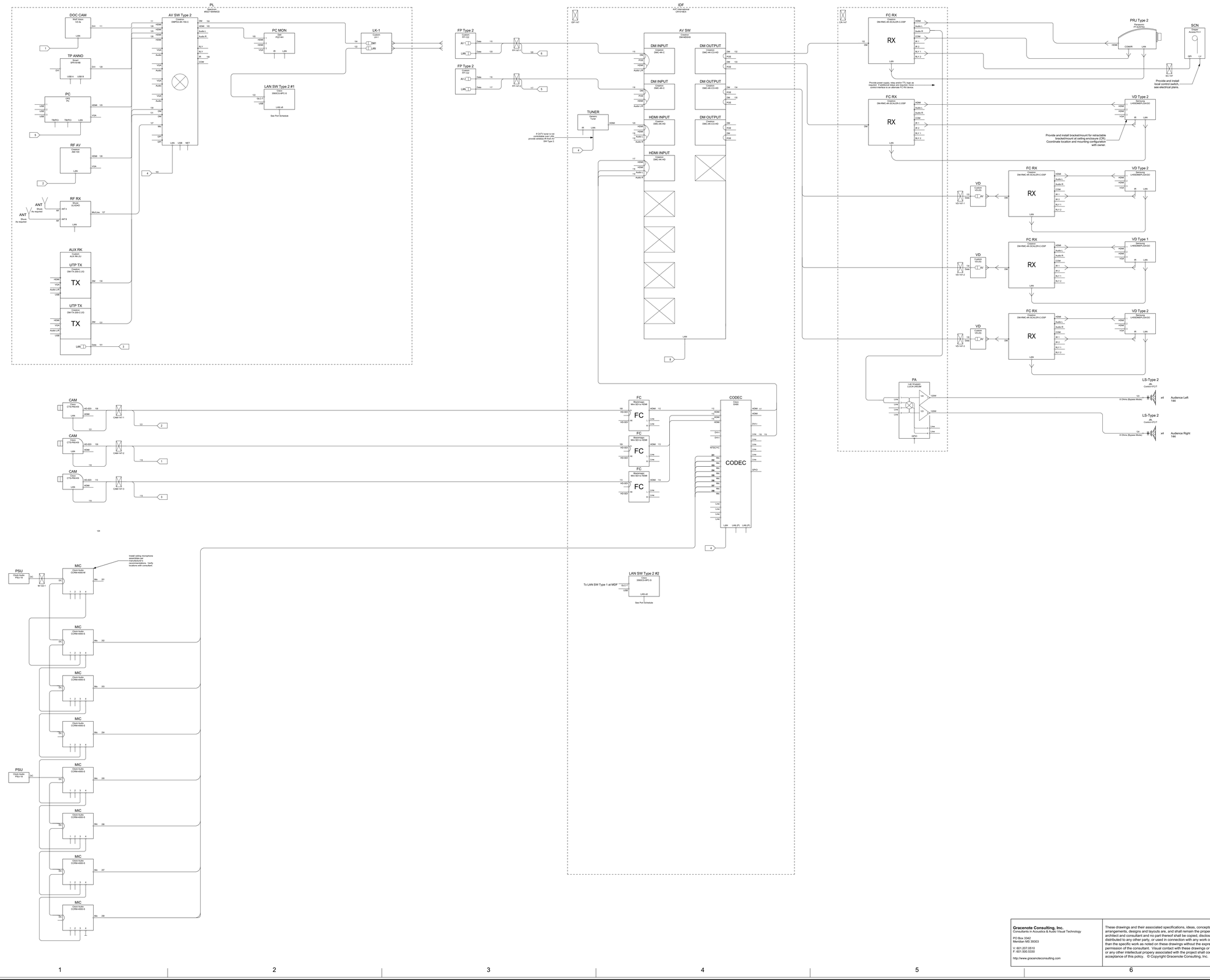

STUDIO SOUTH
ARCHITECTS, PLLC

in association with
Eley Associates / Architects, P.A.

628 Washington Avenue, Suite C
Ocean Springs, MS 39564
228-762-8575 fax 769-9545

CONSULTANTS

STRUCTURAL

Structural Design Group
Contact: Thomas C. Schaeffer, P.E.
220 Great Circle Road Suite 106
Nashville, TN 37228
Tele: 615-255-5537

MECHANICAL

Eldridge & Associates, P.A.
Contact: Jimmy W. Eldridge, P.E.
604 HWY. 80 West Suite U
Clinton, MS
Tele: 601-925-5258

ELECTRICAL

Watkins & O'Gwynn
Contact: Holden O'Gwynn, Jr., P.E.
4523 Office Park Drive
Jackson, MS 39206
Tele: 601-982-3313

CIVIL

Ford Engineering Services, PLLC
Contact: Joel Ford
2010 Oak Grove Road
Building 4, Suite 1
Hattiesburg, MS 39402
Tele: 601-264-7296

PROFESSIONAL SEALS

PROJECT TITLE

GS# 108-261

School of Nursing Building

University of Southern Mississippi
(Institutions of Higher Learning)
Hattiesburg, MS

ISSUE

MARK	DATE	DESCRIPTION
	02-21-14	CONSTRUCTION DOCUMENTS
	10.1.15	Revised per owner's requirements
	12.1.15	AV Bid Documents
	4.4.16	AV Bid Documents Rev1

MANAGEMENT

PROJECT NO:
PROJECT AREA:
CAD DWG FILE:
DRAWN BY:
CHECKED BY:

SHEET TITLE

LARGE CLASSROOM 147
SINGLE LINE

AV 3.5

Gracenote Consulting, Inc.
Consultants in Acoustics & Audio Visual Technology

PO Box 3342
Meridian MS 39303

V: 601.207.0510
F: 601.500.5330

http://www.gracenoteconsulting.com

These drawings and their associated specifications, ideas, concepts, arrangements, designs and layouts are, and shall remain the property of the architect and consultant and no part thereof shall be copied, disclosed or distributed to any other party, or used in connection with any work or project other than the specific work as noted on these drawings without the express written permission of the consultant. Visual contact with these drawings or specifications or any other intellectual propery associated with the project shall constitute acceptance of this policy. © Copyright Gracenote Consulting, Inc.

Cable Schedule

Number	Signal Type	Origin	Destination	Wire Type	Termination
5557	37	37	37	37	37
119	---	---	---	---	---
118	---	---	---	---	---
117	---	---	---	---	---
101	LAN	AUX RK	LAN SW Type 2	CAT6	RJ45
103	LAN	AV SW Type 2	LAN SW Type 2	CAT6	RJ45
120	---	---	---	---	---
104	DM	AV SW Type 2	LK-1	DM	RJ45
106	IR Control	AV SW Type 2	VD Type 2	3-cond stranded, 20AV	Euro/Screw
105	HDMI	AV SW Type 2	VD Type 2	HDMI	HDMI
108	HD-SDI	CAM	FC	Belden 1694A	RJ45
110	HD-SDI	CAM	FC	Belden 1694A	RJ45
109	HD-SDI	CAM	FC	Belden 1694A	RJ45
132	DM	DM OUTPUT	FC RX	DM	RJ45
133	DM	DM OUTPUT	FC RX	DM	RJ45
135	DM	DM OUTPUT	FC RX	DM	RJ45
134	DM	DM OUTPUT	FC RX	DM	RJ45
111	DVI/HDMI	DOC CAM	AV SW	HDMI	DVI Adapter, HDMI
114	HDMI	FC	Codec	HDMI	HDMI
113	HDMI	FC	Codec	HDMI	HDMI
112	HDMI	FC	Codec	HDMI	HDMI
116	Crestron DM	FP	AV SW	As recommended by n	RJ45
121	Ethernet	FP	LAN SW	As recommended by n	RJ45
115	Crestron DM	FP	AV SW	As recommended by n	RJ45
122	LAN	LAN SWY Type 2	LK-1	CAT6	RJ45
208	Mic	MIC	Codec	West Penn 452	XLR, Euro
203	Mic	MIC	Codec	West Penn 452	XLR, Euro
202	Mic	MIC	Codec	West Penn 452	XLR, Euro
205	Mic	MIC	Codec	West Penn 452	XLR, Euro
206	Mic	MIC	Codec	West Penn 452	XLR, Euro
204	Mic	MIC	Codec	West Penn 452	XLR, Euro
201	Mic	MIC	Codec	West Penn 452	XLR, Euro
207	Mic	MIC	Codec	West Penn 452	XLR, Euro
123	Spkr	PA Type 1	LS Type 1	West Penn 225	Solder, Crimp
124	Spkr	PA Type 1	LS Type 1	West Penn 225	Solder, Crimp
125	HDMI	PC	AV SW	HDMI	HDMI
126	HDMI	RF AV	AV SW	HDMI	HDMI
127	HDMI	RF AV	AV SW	HDMI	HDMI
128	DVI/HDMI	TP ANNO	AV SW	HDMI	DVI Adapter, HDMI
129	HDMI	Tuner	AV SW	HDMI	HDMI
131	DM	UTP TX	AV SW	DM	RJ45
130	DM	UTP TX	AV SW	DM	RJ45

Equipment Schedule (provided for reference only. Refer to single line drawings, plans and specifications for contract requirements).

Designator	Manufacturer	Model	System	Location	Rack	Scope	Note
							Provide mounts and cabling as required by the
ANT	Shure	As required	Microphones	Lectern Rack	NA	AV	manufacturer.
AUX RK	Custom	AUX RK-2U	AV	Lectern	Lectern	AV	
AV SW	Crestron	DM-MD8X8				AV/OFE	
AV SW Type 2	Crestron	DMPS3-4K-150-C				AV	
CAM	Cisco	CTS-P60-K9	AV			AV	Provide power supply.
CODEC	Cisco	SX80	AV			AV/OFE	
DM INPUT	Crestron	DMC-4K-C	Video			AV	Provide DM-PSU where required, see connected input sources.
DM OUTPUT	Crestron	DMC-4K-CO-HD				AV	
DOC CAM	Wolf Vision	VZ-3s	Presentation	Lectern	NA	AV	Provide DVI/HDMI adapter as recommended by the manufacturer.
FC	Blackmagic	Mini SDI to HDMI	Video	MDF	NA	AV	Mount back of rack.
FC RX	Crestron	DM-RMC-4K-SCALER-C-DS	Projection	Ceiling	NA	AV	Mount at projector, verify location.
FP Type 2	Custom	FP-122	Panels	Floor	NA	AV	
HDMI INPUT	Crestron	DMC-4K-HD	Video			AV	
IDF	AVF International	CR1016EX	Racks	IDF		AV	
LK-1	Custom	LK-1	Panels	Lectern		AV	See Panel Elevation
LS-Type 2	JBL	Control 47C/T				AV	
MIC	Clock Audio	CCRM-4000-S	Microhones	Ceiling		AV	Provide power supply, configure control I/O as required by manufacturer. Verify suspension height with consultant.
MIC	Clock Audio	CCRM-4000-M	Microhones	Ceiling		AV	Provide power supply, configure control I/O as required by manufacturer. Verify suspension height with consultant.
PA	Lab Gruppen	LUCIA 240/2M	Audio			AV	
PC	OFE	PC	Presentation	Podium		OFE	Verify configuration with owner, terminate video as required.
PC MON	Dell	P2214H	Displays	Lectern	NA	AV	
PL	Spectrum	#55211BWMOD	Frames			AV	Grey with Cherry Trim, provide left side flip-up Shelf Part #55219, submit for approval prior to procurement.
PRJ Type 2	Panasonic	PT-EZ570U	Projection	Flush ceiling	NA	AV	Provide lens to meet the projection geometry, see plans.
PSU	Clock Audio	PSU-18				AV/OFE	Provide as required by manufacturer.
RF AV	Crestron	AM-100	Presentation	Podium		AV/OFE	
RF RX	Shure	ULXD4	Microphones	MDF	MDF	AV	Provide remote antennae at locations shown on plans. Provide the following Shure accessories: ULXD1, ULXD2 transmitter, SB900 battery (2), SBC200 Charging Station, MX150 Lavalier, Countryman E6.
SCN	Draper	Access Fit V	Projection	Screen Wall	NA	AV	Provide low-voltage control interface module as required to support dry contact wall switch and AV control system interface. See electrical plans. Refer to Draper Quote# 507286- 002.
TP ANNO	Smart	SP518-NB	Presentation	Podium	Podium	AV/OFE	
TUNER	Generic	Tuner	Program			AV/OFE	Coordinate procurement with CATV vendor.
UTP TX	Crestron	DM-TX-200-C-2G	AV			AV	Power over DM, or provide power supply.
---	Samsung	LH65DMEPLGA/GO	Displays	Side Wall	NA	Display	Provide bracket and support hardware as required.
---	Cisco	3560CG-8PC-S	Network			AV	Provide 1- GLC-T Module
VD	Custom	VD-2G	Field Panels	Side Wall	NA	AV	

LAN Port & Switch Schedule

Switch#	Switch Product	Port#	Connected To	Cable	Provided By	Installed By
13	13	13	13	13	13	13
LAN SW Type 2 #1	Cisco WS-C3560CG-8PC-S with (1) one GLC-T= (mini-GBIC)	1	Projector RX	CAT6	AV Contractor	AV Contractor
LAN SW Type 2 #1	Cisco WS-C3560CG-8PC-S with (1) one GLC-T= (mini-GBIC)	2	Projector RX	CAT6	AV Contractor	AV Contractor
LAN SW Type 2 #1	Cisco WS-C3560CG-8PC-S with (1) one GLC-T= (mini-GBIC)	3	Projector RX	CAT6	AV Contractor	AV Contractor
LAN SW Type 2 #1	Cisco WS-C3560CG-8PC-S with (1) one GLC-T= (mini-GBIC)	4	Projector RX	CAT6	AV Contractor	AV Contractor
LAN SW Type 2 #1	Cisco WS-C3560CG-8PC-S with (1) one GLC-T= (mini-GBIC)	5	Projector RX	CAT6	AV Contractor	AV Contractor
LAN SW Type 2 #2	Cisco WS-C3560CG-8PC-S with (1) one GLC-T= (mini-GBIC)	1	CAM	CAT6	AV Contractor	AV Contractor
LAN SW Type 2 #2	Cisco WS-C3560CG-8PC-S with (1) one GLC-T= (mini-GBIC)	2	CAM	CAT6	AV Contractor	AV Contractor
LAN SW Type 2 #2	Cisco WS-C3560CG-8PC-S with (1) one GLC-T= (mini-GBIC)	3	CAM	CAT6	AV Contractor	AV Contractor
LAN SW Type 2 #2	Cisco WS-C3560CG-8PC-S with (1) one GLC-T= (mini-GBIC)	4	AV SW	CAT6	AV Contractor	AV Contractor
LAN SW Type 2 #2	Cisco WS-C3560CG-8PC-S with (1) one GLC-T= (mini-GBIC)	4	Codec	CAT6	AV Contractor	AV Contractor
LAN SW Type 2 #2	Cisco WS-C3560CG-8PC-S with (1) one GLC-T= (mini-GBIC)	5	TL	CAT6	AV Contractor	AV Contractor
LAN SW Type 2 #2	Cisco WS-C3560CG-8PC-S with (1) one GLC-T= (mini-GBIC)	6	TL	CAT6	AV Contractor	AV Contractor
LAN SW Type 2 #2	Cisco WS-C3560CG-8PC-S with (1) one GLC-T= (mini-GBIC)	8	AV SW	CAT6	AV Contractor	AV Contractor

Gracenote Consulting, Inc.
Consultants in Acoustics & Audio Visual Technology

PO Box 3342
Meridian MS 39303

V: 601.207.0510
F: 601.500.5330

http://www.gracenoteconsulting.com

These drawings and their associated specifications, ideas, concepts, arrangements, designs and layouts are, and shall remain the property of the architect and consultant and no part thereof shall be copied, disclosed or distributed to any other party, or used in connection with any work or project other than the specific work as noted on these drawings without the express written permission of the consultant. Visual contact with these drawings or specifications or any other intellectual propery associated with the project shall constitute aceptance of this policy. © Copyright Gracenote Consulting, Inc.

STUDIO SOUTH
ARCHITECTS, PLLC

in association with

Eley Associates / Architects, P.A.

628 Washington Avenue, Suite C
Ocean Springs, MS 39564
228-762-8575 fax 769-9545

CONSULTANTS

STRUCTURAL

Structural Design Group
Contact: Thomas C. Schaeffer, P.E.
220 Great Circle Road Suite 106
Nashville, TN 37228
Tele: 615-255-5537

MECHANICAL

Eldridge & Associates, P.A.
Contact: Jimmy W. Eldridge, P.E.
604 HWY. 80 West Suite U
Clinton, MS
Tele: 601-925-5258

ELECTRICAL

Watkins & O'Gwynn
Contact: Holden O'Gwynn, Jr., P.E.
4523 Office Park Drive
Jackson, MS 39206
Tele: 601-982-3313

CIVIL

Ford Engineering Services, PLLC
Contact: Joel Ford
2010 Oak Grove Road
Building 4, Suite 1
Hattiesburg, MS 39402
Tele: 601-264-7296

PROFESSIONAL SEALS

PROJECT TITLE

GS# 108-261

School of Nursing Building

University of Southern Mississippi
(Institutions of Higher Learning)
Hattiesburg, MS

ISSUE

MARK	DATE	DESCRIPTION
	02-21-14	CONSTRUCTION DOCUMENTS
	10.1.15	Revised per owner's requirements
	12.1.15	AV Bid Documents
	4.4.16	AV Bid Documents Rev1

MANAGEMENT

PROJECT NO:
PROJECT AREA:
CAD DWG FILE:
DRAWN BY:
CHECKED BY:

SHEET TITLE

LARGE CLASSROOM 147
SCHEDULES

AV 3.6

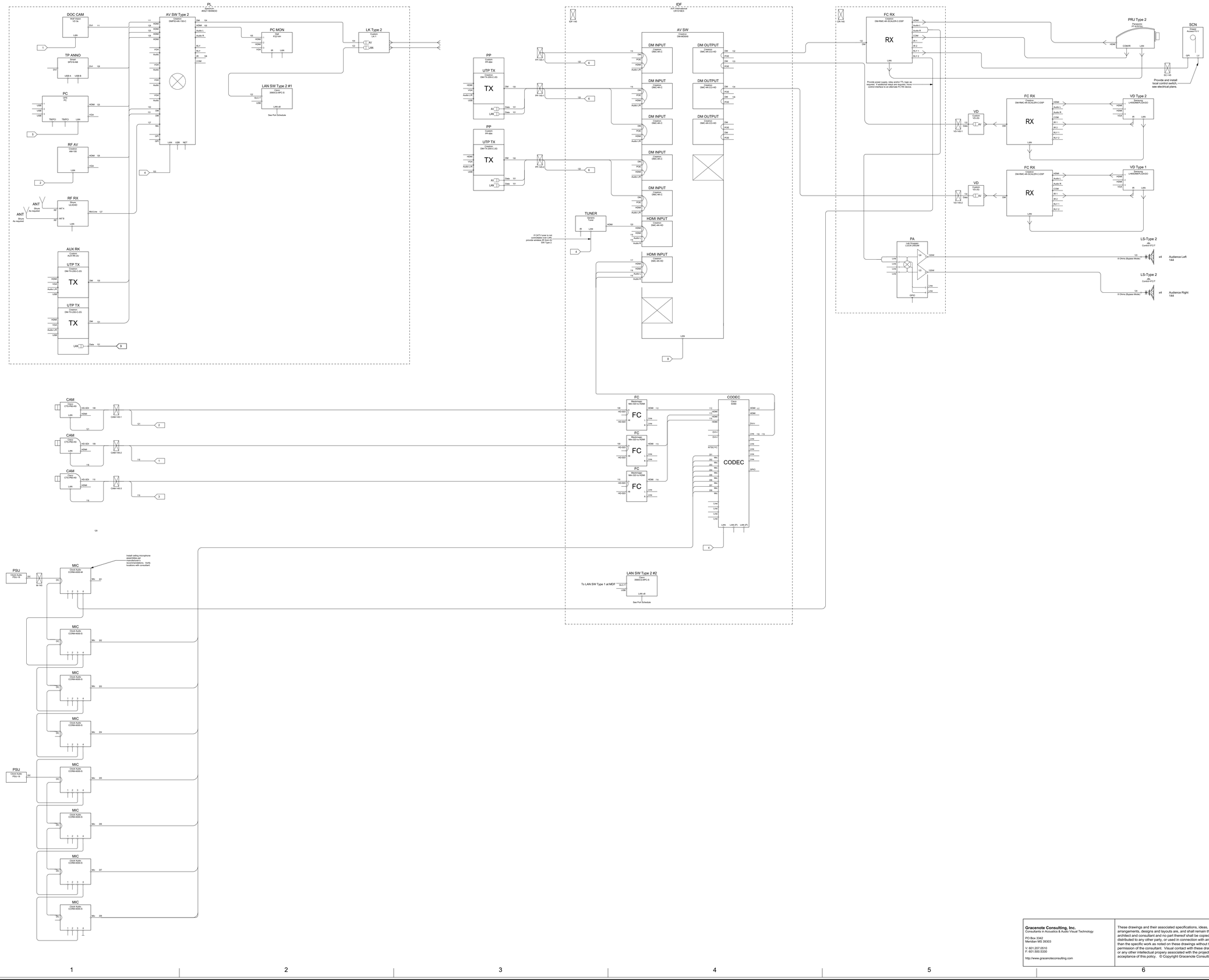

STUDIO SOUTH
ARCHITECTS, PLLC

in association with

Eley Associates / Architects, P.A.

628 Washington Avenue, Suite C
Ocean Springs, MS 39564
228-762-8575 fax 769-9545

CONSULTANTS

STRUCTURAL

Structural Design Group
Contact: Thomas C. Schaeffer, P.E.
220 Great Circle Road Suite 106
Nashville, TN 37228
Tele: 615-255-5537

MECHANICAL

Eldridge & Associates, P.A.
Contact: Jimmy W. Eldridge, P.E.
604 HWY. 80 West Suite U
Clinton, MS
Tele: 601-925-5258

ELECTRICAL

Watkins & O'Gwynn
Contact: Holden O'Gwynn, Jr., P.E.
4523 Office Park Drive
Jackson, MS 39206
Tele: 601-982-3313

CIVIL

Ford Engineering Services, PLLC
Contact: Joel Ford
2010 Oak Grove Road
Building 4, Suite 1
Hattiesburg, MS 39402
Tele: 601-264-7296

PROFESSIONAL SEALS

PROJECT TITLE

GS# 108-261

School of Nursing Building

University of Southern Mississippi
(Institutions of Higher Learning)
Hattiesburg, MS

ISSUE

MARK	DATE	DESCRIPTION
	02-21-14	CONSTRUCTION DOCUMENTS
	10.1.15	Revised per owner's requirements
	12.1.15	AV Bid Documents
	4.4.16	AV Bid Documents Rev1

MANAGEMENT

PROJECT NO:
PROJECT AREA:
CAD DWG FILE:
DRAWN BY:
CHECKED BY:

SHEET TITLE

LARGE CLASSROOM 145
SINGLE LINE

AV 3.7

Gracenote Consulting, Inc.
Consultants in Acoustics & Audio Visual Technology

PO Box 3342
Meridian MS 39303

V: 601.207.0510
F: 601.500.5330

http://www.gracenoteconsulting.com

These drawings and their associated specifications, ideas, concepts, arrangements, designs and layouts are, and shall remain the property of the architect and consultant and no part thereof shall be copied, disclosed or distributed to any other party, or used in connection with any work or project other than the specific work as noted on these drawings without the express written permission of the consultant. Visual contact with these drawings or specifications or any other intellectual propery associated with the project shall constitute acceptance of this policy. © Copyright Gracenote Consulting, Inc.

Cable Schedule

Number	Signal Type	Origin	Destination	Wire Type	Termination
5557	38	38	38	38	38
101	LAN	AUX RK	LAN SW Type 2	CAT6	RJ45
119	---	---	---	---	---
118	---	---	---	---	---
103	LAN	AV SW Type 2	LAN SW Type 2	CAT6	RJ45
106	IR Control	AV SW Type 2	VD Type 2	3-cond stranded, 20A	Euro/Screw
105	HDMI	AV SW Type 2	VD Type 2	HDMI	HDMI
104	DM	AV SW Type 2	LK-1	DM	RJ45
110	HD-SDI	CAM	FC	Belden 1694A	RJ45
109	HD-SDI	CAM	FC	Belden 1694A	RJ45
108	HD-SDI	CAM	FC	Belden 1694A	RJ45
117	HDMI	Codec	AV SW	HDMI	HDMI
134	DM	DM OUTPUT	FC RX	DM	RJ45
133	DM	DM OUTPUT	FC RX	DM	RJ45
132	DM	DM OUTPUT	FC RX	DM	RJ45
135	DM	DM OUTPUT	FC RX	DM	RJ45
111	DVI/HDMI	DOC CAM	AV SW	HDMI	DVI Adapter, HDMI
113	HDMI	FC	Codec	HDMI	HDMI
112	HDMI	FC	Codec	HDMI	HDMI
114	HDMI	FC	Codec	HDMI	HDMI
115	Crestron DM	FP	AV SW	As recommended by n	RJ45
116	Crestron DM	FP	AV SW	As recommended by n	RJ45
121	Ethernet	FP	LAN SW	As recommended by n	RJ45
122	LAN	LAN SWY Type 2	LK-1	CAT6	RJ45
202	Mic	MIC	Codec	West Penn 452	XLR, Euro
206	Mic	MIC	Codec	West Penn 452	XLR, Euro
205	Mic	MIC	Codec	West Penn 452	XLR, Euro
201	Mic	MIC	Codec	West Penn 452	XLR, Euro
204	Mic	MIC	Codec	West Penn 452	XLR, Euro
203	Mic	MIC	Codec	West Penn 452	XLR, Euro
208	Mic	MIC	Codec	West Penn 452	XLR, Euro
207	Mic	MIC	Codec	West Penn 452	XLR, Euro
123	Spkr	PA Type 1	LS Type 1	West Penn 225	Solder, Crimp
124	Spkr	PA Type 1	LS Type 1	West Penn 225	Solder, Crimp
125	HDMI	PC	AV SW	HDMI	HDMI
127	HDMI	RF AV	AV SW	HDMI	HDMI
126	HDMI	RF AV	AV SW	HDMI	HDMI
120	---	---	---	---	---
128	DVI/HDMI	TP ANNO	AV SW	HDMI	DVI Adapter, HDMI
129	HDMI	Tuner	AV SW	HDMI	HDMI
130	DM	UTP TX	AV SW	DM	RJ45
131	DM	UTP TX	AV SW	DM	RJ45

Equipment Schedule (provided for reference only. Refer to single line drawings, plans and specifications for contract requirements).

Designator	Manufacturer	Model	System	Location	Rack	Scope	Note
---	Cisco	3560CG-8PC-S	Network			AV	Provide 1- GLC-T Module
ANT	Shure	As required	Microphones	Lectern Rack	NA	AV	Provide mounts and cabling as required by the manufacturer.
AV SW	Crestron	DM-MD8X8				AV/OFE	
AV SW Type 2	Crestron	DMPS3-4K-150-C				AV	
CAM	Cisco	CTS-P60-K9	AV			AV	Provide power supply.
CODEC	Cisco	SX80	AV			AV/OFE	
DM INPUT	Crestron	DMC-4K-C	Video			AV	Provide DM-PSU where required, see connected input sources.
DM OUTPUT	Crestron	DMC-4K-CO-HD				AV	
DOC CAM	Wolf Vision	VZ-3s	Presentation	Lectern	NA	AV	Provide DVI/HDMI adapter as recommended by the manufacturer.
FC	Blackmagic	Mini SDI to HDMI	Video	MDF	NA	AV	Mount back of rack.
FC RX	Crestron	DM-RMC-4K-SCALER-C-DS	Projection	Ceiling	NA	AV	Mount at projector, verify location.
HDMI INPUT	Crestron	DMC-4K-HD	Video			AV	
IDF	AVF International	CR1016EX	Racks	IDF		AV	
LK-1	Custom	LK-1	Panels	Lectern		AV	See Panel Elevation
LS-Type 2	JBL	Control 47C/T				AV	
MIC	Clock Audio	CCRM-4000-M	Microhones	Ceiling		AV	Provide power supply, configure control I/O as required by manufacturer. Verify suspension height with consultant.
MIC	Clock Audio	CCRM-4000-S	Microhones	Ceiling		AV	Provide power supply, configure control I/O as required by manufacturer. Verify suspension height with consultant.
PA	Lab Gruppen	LUCIA 240/2M	Audio			AV	
PC	OFE	PC	Presentation	Podium		OFE	Verify configuration with owner, terminate video as required.
PC MON	Dell	P2214H	Displays	Lectern	NA	AV	
PL	Spectrum	#55211BWMOD	Frames			AV	Grey with Cherry Trim, provide left side flip-up Shelf Part #55219, submit for approval prior to procurement.
PP	Custom	PP-664	AV	Wall	NA	AV	
PRJ Type 2	Panasonic	PT-EZ570U	Projection	Flush ceiling	NA	AV	Provide lens to meet the projection geometry, see plans.
PSU	Clock Audio	PSU-18				AV/OFE	Provide as required by manufacturer.
RF AV	Crestron	AM-100	Presentation	Podium		AV/OFE	
RF RX	Shure	ULXD4	Microphones	MDF	MDF	AV	Provide remote antennae at locations shown on plans. Provide the following Shure accessories: ULXD1, ULXD2 transmitter, SB900 battery (2), SBC200 Charging Station, MX150 Lavalier, Countryman E6.
SCN	Draper	Access Fit V	Projection	Screen Wall	NA	AV	Provide low-voltage control interface module as required to support dry contact wall switch and AV control system interface. See electrical plans. Refer to Draper Quote# 507286- 002.
TP ANNO	Smart	SP518-NB	Presentation	Podium	Podium	AV/OFE	
TUNER	Generic	Tuner	Program			AV/OFE	Coordinate procurement with CATV vendor.
UTP TX	Crestron	DM-TX-200-C-2G	AV			AV	Power over DM, or provide power supply.
VD	Custom	VD-2G	Field Panels	Side Wall	NA	AV	
VD Type 1	Samsung	LH65DMEPLGA/GO	Displays	Side Wall	NA	Display	Provide bracket and support hardware as required.
VD Type 2	Samsung	LH55DMEPLGA/GO	Displays	Side Wall	NA	Display	Provide bracket and support hardware as required.

LAN Port & Switch Schedule

Switch#	Switch Product	Port#	Connected To	Cable	Provided By	Installed By
12	12	12	12	12	12	12
LAN SW Type 2 #1	Cisco WS-C3560CG-8PC-S with (1) one GLC-T= (mini-GBIC)	1	Projector RX	CAT6	AV Contractor	AV Contractor
LAN SW Type 2 #1	Cisco WS-C3560CG-8PC-S with (1) one GLC-T= (mini-GBIC)	2	Projector RX	CAT6	AV Contractor	AV Contractor
LAN SW Type 2 #1	Cisco WS-C3560CG-8PC-S with (1) one GLC-T= (mini-GBIC)	3	Projector RX	CAT6	AV Contractor	AV Contractor
LAN SW Type 2 #1	Cisco WS-C3560CG-8PC-S with (1) one GLC-T= (mini-GBIC)	4	Projector RX	CAT6	AV Contractor	AV Contractor
LAN SW Type 2 #1	Cisco WS-C3560CG-8PC-S with (1) one GLC-T= (mini-GBIC)	5	Projector RX	CAT6	AV Contractor	AV Contractor
LAN SW Type 2 #2	Cisco WS-C3560CG-8PC-S with (1) one GLC-T= (mini-GBIC)	1	CAM	CAT6	AV Contractor	AV Contractor
LAN SW Type 2 #2	Cisco WS-C3560CG-8PC-S with (1) one GLC-T= (mini-GBIC)	2	CAM	CAT6	AV Contractor	AV Contractor
LAN SW Type 2 #2	Cisco WS-C3560CG-8PC-S with (1) one GLC-T= (mini-GBIC)	3	CAM	CAT6	AV Contractor	AV Contractor
LAN SW Type 2 #2	Cisco WS-C3560CG-8PC-S with (1) one GLC-T= (mini-GBIC)	4	AV SW	CAT6	AV Contractor	AV Contractor
LAN SW Type 2 #2	Cisco WS-C3560CG-8PC-S with (1) one GLC-T= (mini-GBIC)	4	Codec	CAT6	AV Contractor	AV Contractor
LAN SW Type 2 #2	Cisco WS-C3560CG-8PC-S with (1) one GLC-T= (mini-GBIC)	6	TL	CAT6	AV Contractor	AV Contractor
LAN SW Type 2 #2	Cisco WS-C3560CG-8PC-S with (1) one GLC-T= (mini-GBIC)	8	AV SW	CAT6	AV Contractor	AV Contractor

Gracenote Consulting, Inc.
Consultants in Acoustics & Audio Visual Technology

PO Box 3342
Meridian MS 39303

V: 601.207.0510
F: 601.500.5330

http://www.gracenoteconsulting.com

These drawings and their associated specifications, ideas, concepts, arrangements, designs and layouts are, and shall remain the property of the architect and consultant and no part thereof shall be copied, disclosed or distributed to any other party, or used in connection with any work or project other than the specific work as noted on these drawings without the express written permission of the consultant. Visual contact with these drawings or specifications or any other intellectual propery associated with the project shall constitute acceptance of this policy. © Copyright Gracenote Consulting, Inc.

STUDIO SOUTH
ARCHITECTS, PLLC

in association with

Eley Associates / Architects, P.A.

628 Washington Avenue, Suite C
Ocean Springs, MS 39564
228-762-8575 fax 769-9545

CONSULTANTS

STRUCTURAL

Structural Design Group
Contact: Thomas C. Schaeffer, P.E.
220 Great Circle Road Suite 106
Nashville, TN 37228
Tele: 615-255-5537

MECHANICAL

Eldridge & Associates, P.A.
Contact: Jimmy W. Eldridge, P.E.
604 HWY. 80 West Suite U
Clinton, MS
Tele: 601-925-5258

ELECTRICAL

Watkins & O'Gwynn
Contact: Holden O'Gwynn, Jr., P.E.
4523 Office Park Drive
Jackson, MS 39206
Tele: 601-982-3313

CIVIL

Ford Engineering Services, PLLC
Contact: Joel Ford
2010 Oak Grove Road
Building 4, Suite 1
Hattiesburg, MS 39402
Tele: 601-264-7296

PROFESSIONAL SEALS

PROJECT TITLE

GS# 108-261

School of Nursing Building

University of Southern Mississippi
(Institutions of Higher Learning)
Hattiesburg, MS

ISSUE

MARK	DATE	DESCRIPTION
	02-21-14	CONSTRUCTION DOCUMENTS
	10.1.15	Revised per owner's requirements
	12.1.15	AV Bid Documents
	4.4.16	AV Bid Documents Rev1

MANAGEMENT

PROJECT NO:
PROJECT AREA:
CAD DWG FILE:
DRAWN BY:
CHECKED BY:

SHEET TITLE

LARGE CLASSROOM 145
SCHEDULES

AV 3.8

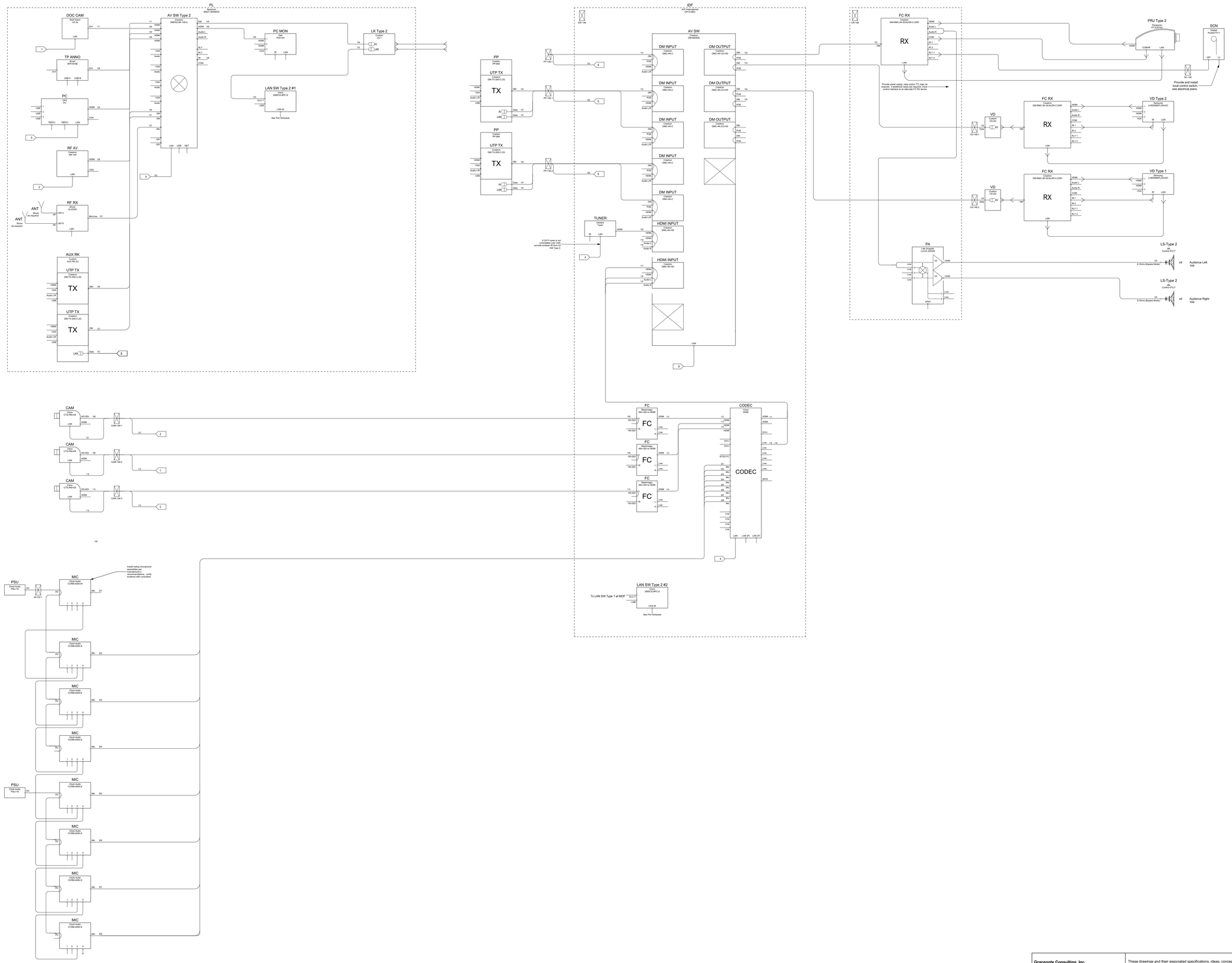

STUDIO SOUTH
ARCHITECTS, PLLC

in association with

Eley Associates / Architects, P.A.

628 Washington Avenue, Suite C
Ocean Springs, MS 39564
228-762-8575 fax 769-9545

CONSULTANTS

STRUCTURAL

Structural Design Group
Contact: Thomas C. Schaeffer, P.E.
220 Great Circle Road Suite 106
Nashville, TN 37228
Tele: 615-255-5537

MECHANICAL

Eldridge & Associates, P.A.
Contact: Jimmy W. Eldridge, P.E.
604 HWY. 80 West Suite U
Clinton, MS
Tele: 601-925-5258

ELECTRICAL

Watkins & O'Gwynn
Contact: Holden O'Gwynn, Jr., P.E.
4523 Office Park Drive
Jackson, MS 39206
Tele: 601-982-3313

CIVIL

Ford Engineering Services, PLLC
Contact: Joel Ford
2010 Oak Grove Road
Building 4, Suite 1
Hattiesburg, MS 39402
Tele: 601-264-7296

PROFESSIONAL SEALS

PROJECT TITLE

GS# 108-261

School of Nursing Building

University of Southern Mississippi
(Institutions of Higher Learning)
Hattiesburg, MS

ISSUE

MARK	DATE	DESCRIPTION
	02-21-14	CONSTRUCTION DOCUMENTS
	10.1.15	Revised per owner's requirements
	12.1.15	AV Bid Documents
	4.4.16	AV Bid Documents Rev1

MANAGEMENT

PROJECT NO:
PROJECT AREA:
CAD DWG FILE:
DRAWN BY:
CHECKED BY:

SHEET TITLE

LARGE CLASSROOM 146
SINGLE LINE

AV 3.9

Gracenote Consulting, Inc.
Consultants in Acoustics & Audio Visual Technology

PO Box 3342
Meridian MS 39303

V: 601.207.0810
F: 601.500.5330

http://www.gracenoteconsulting.com

These drawings and their associated specifications, ideas, concepts, arrangements, designs and layouts are, and shall remain the property of the architect and consultant and no part thereof shall be copied, disclosed or distributed to any other party, or used in connection with any work or project other than the specific work as noted on these drawings without the express written permission of the consultant. Visual contact with these drawings or specifications or any other intellectual propery associated with the project shall constitute acceptance of this policy. © Copyright Gracenote Consulting, Inc.

Cable Schedule

Number	Signal Type	Origin	Destination	Wire Type	Termination
101	LAN	AUX RK	LAN SW Type 2	CAT6	RJ45
119	---	---	---	---	---
118	---	---	---	---	---
103	LAN	AV SW Type 2	LAN SW Type 2	CAT6	RJ45
106	IR Control	AV SW Type 2	VD Type 2	3-cond stranded, 20AV	Euro/Screw
105	HDMI	AV SW Type 2	VD Type 2	HDMI	HDMI
104	DM	AV SW Type 2	LK-1	DM	RJ45
110	HD-SDI	CAM	FC	Belden 1694A	RJ45
109	HD-SDI	CAM	FC	Belden 1694A	RJ45
108	HD-SDI	CAM	FC	Belden 1694A	RJ45
117	HDMI	Codec	AV SW	HDMI	HDMI
134	DM	DM OUTPUT	FC RX	DM	RJ45
133	DM	DM OUTPUT	FC RX	DM	RJ45
132	DM	DM OUTPUT	FC RX	DM	RJ45
135	DM	DM OUTPUT	FC RX	DM	RJ45
111	DVI/HDMI	DOC CAM	AV SW	HDMI	DVI Adapter, HDMI
113	HDMI	FC	Codec	HDMI	HDMI
112	HDMI	FC	Codec	HDMI	HDMI
114	HDMI	FC	Codec	HDMI	HDMI
115	Crestron DM	FP	AV SW	As recommended by n	RJ45
116	Crestron DM	FP	AV SW	As recommended by n	RJ45
121	Ethernet	FP	LAN SW	As recommended by n	RJ45
122	LAN	LAN SWY Type 2	LK-1	CAT6	RJ45
202	Mic	MIC	Codec	West Penn 452	XLR, Euro
206	Mic	MIC	Codec	West Penn 452	XLR, Euro
205	Mic	MIC	Codec	West Penn 452	XLR, Euro
201	Mic	MIC	Codec	West Penn 452	XLR, Euro
204	Mic	MIC	Codec	West Penn 452	XLR, Euro
203	Mic	MIC	Codec	West Penn 452	XLR, Euro
208	Mic	MIC	Codec	West Penn 452	XLR, Euro
207	Mic	MIC	Codec	West Penn 452	XLR, Euro
123	Spkr	PA Type 1	LS Type 1	West Penn 225	Solder, Crimp
124	Spkr	PA Type 1	LS Type 1	West Penn 225	Solder, Crimp
125	HDMI	PC	AV SW	HDMI	HDMI
127	HDMI	RF AV	AV SW	HDMI	HDMI
126	HDMI	RF AV	AV SW	HDMI	HDMI
120	---	---	---	---	---
128	DVI/HDMI	TP ANNO	AV SW	HDMI	DVI Adapter, HDMI
129	HDMI	Tuner	AV SW	HDMI	HDMI
130	DM	UTP TX	AV SW	DM	RJ45
131	DM	UTP TX	AV SW	DM	RJ45

Equipment Schedule (provided for reference only. Refer to single line drawings, plans and specifications for contract requirements).

Designator	Manufacturer	Model	System	Location	Rack	Scope	Note
---	Cisco	3560CG-8PC-S	Network			AV	Provide 1- GLC-T Module
ANT	Shure	As required	Microphones	Lectern Rack	NA	AV	Provide mounts and cabling as required by the manufacturer.
AV SW	Crestron	DM-MD8X8				AV/OFE	
AV SW Type 2	Crestron	DMPS3-4K-150-C				AV	
CAM	Cisco	CTS-P60-K9	AV			AV	Provide power supply.
CODEC	Cisco	SX80	AV			AV/OFE	
DM INPUT	Crestron	DMC-4K-C	Video			AV	Provide DM-PSU where required, see connected input sources.
DM OUTPUT	Crestron	DMC-4K-CO-HD				AV	
DOC CAM	Wolf Vision	VZ-3s	Presentation	Lectern	NA	AV	Provide DVI/HDMI adapter as recommended by the manufacturer.
FC	Blackmagic	Mini SDI to HDMI	Video	MDF	NA	AV	Mount back of rack.
FC RX	Crestron	DM-RMC-4K-SCALER-C-DS	Projection	Ceiling	NA	AV	Mount at projector, verify location.
HDMI INPUT	Crestron	DMC-4K-HD	Video			AV	
IDF	AVF International	CR1016EX	Racks	IDF		AV	
LK-1	Custom	LK-1	Panels	Lectern		AV	See Panel Elevation
LS-Type 2	JBL	Control 47C/T				AV	
MIC	Clock Audio	CCRM-4000-M	Microhones	Ceiling		AV	Provide power supply, configure control I/O as required by manufacturer. Verify suspension height with consultant.
MIC	Clock Audio	CCRM-4000-S	Microhones	Ceiling		AV	Provide power supply, configure control I/O as required by manufacturer. Verify suspension height with consultant.
PA	Lab Gruppen	LUCIA 240/2M	Audio			AV	
PC	OFE	PC	Presentation	Podium		OFE	Verify configuration with owner, terminate video as required.
PC MON	Dell	P2214H	Displays	Lectern	NA	AV	
PL	Spectrum	#55211BWMOD	Frames			AV	Grey with Cherry Trim, provide left side flip-up Shelf Part #55219, submit for approval prior to procurement.
PP	Custom	PP-664	AV	Wall	NA	AV	
PRJ Type 2	Panasonic	PT-EZ570U	Projection	Flush ceiling	NA	AV	Provide lens to meet the projection geometry, see plans.
PSU	Clock Audio	PSU-18				AV/OFE	Provide as required by manufacturer.
RF AV	Crestron	AM-100	Presentation	Podium		AV/OFE	
RF RX	Shure	ULXD4	Microphones	MDF	MDF	AV	Provide remote antennae at locations shown on plans. Provide the following Shure accessories: ULXD1, ULXD2 transmitter, SB900 battery (2), SBC200 Charging Station, MX150 Lavalier, Countryman E6.
SCN	Draper	Access Fit V	Projection	Screen Wall	NA	AV	Provide low-voltage control interface module as required to support dry contact wall switch and AV control system interface. See electrical plans. Refer to Draper Quote# 507286- 002.
TP ANNO	Smart	SP518-NB	Presentation	Podium	Podium	AV/OFE	
TUNER	Generic	Tuner	Program			AV/OFE	Coordinate procurement with CATV vendor.
UTP TX	Crestron	DM-TX-200-C-2G	AV			AV	Power over DM, or provide power supply.
VD	Custom	VD-2G	Field Panels	Side Wall	NA	AV	
VD Type 1	Samsung	LH65DMEPLGA/GO	Displays	Side Wall	NA	Display	Provide bracket and support hardware as required.
VD Type 2	Samsung	LH55DMEPLGA/GO	Displays	Side Wall	NA	Display	Provide bracket and support hardware as required.

LAN Port & Switch Schedule

Switch#	Switch Product	Port#	Connected To	Cable	Provided By	Installed By
LAN SW Type 2 #1	Cisco WS-C3560CG-8PC-S with (1) one GLC-T= (mini-GBIC)	1	Projector RX	CAT6	AV Contractor	AV Contractor
LAN SW Type 2 #1	Cisco WS-C3560CG-8PC-S with (1) one GLC-T= (mini-GBIC)	2	Projector RX	CAT6	AV Contractor	AV Contractor
LAN SW Type 2 #1	Cisco WS-C3560CG-8PC-S with (1) one GLC-T= (mini-GBIC)	3	Projector RX	CAT6	AV Contractor	AV Contractor
LAN SW Type 2 #1	Cisco WS-C3560CG-8PC-S with (1) one GLC-T= (mini-GBIC)	4	Projector RX	CAT6	AV Contractor	AV Contractor
LAN SW Type 2 #1	Cisco WS-C3560CG-8PC-S with (1) one GLC-T= (mini-GBIC)	5	Projector RX	CAT6	AV Contractor	AV Contractor
LAN SW Type 2 #2	Cisco WS-C3560CG-8PC-S with (1) one GLC-T= (mini-GBIC)	1	CAM	CAT6	AV Contractor	AV Contractor
LAN SW Type 2 #2	Cisco WS-C3560CG-8PC-S with (1) one GLC-T= (mini-GBIC)	2	CAM	CAT6	AV Contractor	AV Contractor
LAN SW Type 2 #2	Cisco WS-C3560CG-8PC-S with (1) one GLC-T= (mini-GBIC)	3	CAM	CAT6	AV Contractor	AV Contractor
LAN SW Type 2 #2	Cisco WS-C3560CG-8PC-S with (1) one GLC-T= (mini-GBIC)	4	AV SW	CAT6	AV Contractor	AV Contractor
LAN SW Type 2 #2	Cisco WS-C3560CG-8PC-S with (1) one GLC-T= (mini-GBIC)	4	Codec	CAT6	AV Contractor	AV Contractor
LAN SW Type 2 #2	Cisco WS-C3560CG-8PC-S with (1) one GLC-T= (mini-GBIC)	6	TL	CAT6	AV Contractor	AV Contractor
LAN SW Type 2 #2	Cisco WS-C3560CG-8PC-S with (1) one GLC-T= (mini-GBIC)	8	AV SW	CAT6	AV Contractor	AV Contractor

Gracenote Consulting, Inc.
Consultants in Acoustics & Audio Visual Technology

PO Box 3342
Meridian MS 39303

V: 601.207.0510
F: 601.500.5330

http://www.gracenoteconsulting.com

These drawings and their associated specifications, ideas, concepts, arrangements, designs and layouts are, and shall remain the property of the architect and consultant and no part thereof shall be copied, disclosed or distributed to any other party, or used in connection with any work or project other than the specific work as noted on these drawings without the express written permission of the consultant. Visual contact with these drawings or specifications or any other intellectual propery associated with the project shall constitute acceptance of this policy. © Copyright Gracenote Consulting, Inc.

STUDIO SOUTH
ARCHITECTS, PLLC

in association with

Eley Associates / Architects, P.A.

628 Washington Avenue, Suite C
Ocean Springs, MS 39564
228-762-8575 fax 769-9545

CONSULTANTS

STRUCTURAL

Structural Design Group
Contact: Thomas C. Schaeffer, P.E.
220 Great Circle Road Suite 106
Nashville, TN 37228
Tele: 615-255-5537

MECHANICAL

Eldridge & Associates, P.A.
Contact: Jimmy W. Eldridge, P.E.
604 HWY. 80 West Suite U
Clinton, MS
Tele: 601-925-5258

ELECTRICAL

Watkins & O'Gwynn
Contact: Holden O'Gwynn, Jr., P.E.
4523 Office Park Drive
Jackson, MS 39206
Tele: 601-982-3313

CIVIL

Ford Engineering Services, PLLC
Contact: Joel Ford
2010 Oak Grove Road
Building 4, Suite 1
Hattiesburg, MS 39402
Tele: 601-264-7296

PROFESSIONAL SEALS

PROJECT TITLE

GS# 108-261

School of Nursing Building

University of Southern Mississippi
(Institutions of Higher Learning)
Hattiesburg, MS

ISSUE

MARK	DATE	DESCRIPTION
	02-21-14	CONSTRUCTION DOCUMENTS
	10.1.15	Revised per owner's requirements
	12.1.15	AV Bid Documents
	4.4.16	AV Bid Documents Rev1

MANAGEMENT

PROJECT NO:
PROJECT AREA:
CAD DWG FILE:
DRAWN BY:
CHECKED BY:

SHEET TITLE

LARGE CLASSROOM 146
SCHEDULES

AV 3.10

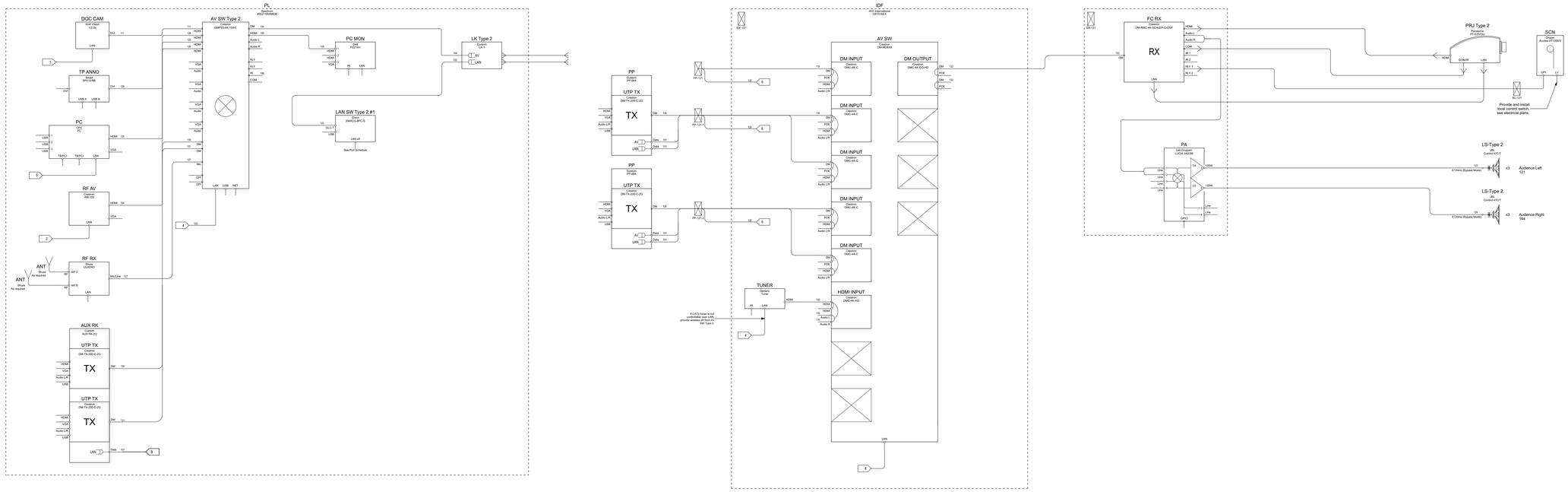

Equipment Schedule (provided for reference only. Refer to single line drawings, plans and specifications for contract requirements).

Designator	Manufacturer	Model	System	Location	Rack	Scope	Note
ANT	Shure	As required	Microphones	Lectern Rack	NA	AV	Provide mounts and cabling as required by the manufacturer.
AUX RK	Custom	AUX RK-2U	AV	Lectern	Lectern	AV	
AV SW	Crestron	DM-MD8X8				AV/OFE	
AV SW Type 2	Crestron	DMPS3-4K-150-C				AV	
DM INPUT	Crestron	DMC-4K-C	Video			AV	Provide DM-PSU where required, see connected input sources.
DM OUTPUT	Crestron	DMC-4K-CO-HD				AV	
DOC CAM	Wolf Vision	VZ-3s	Presentation	Lectern	NA	AV	Provide DVI/HDMI adapter as recommended by the manufacturer.
FC RX	Crestron	DM-RMC-4K-SCALER-C-DS	Projection	Ceiling	NA	AV	Mount at projector, verify location.
HDMI INPUT	Crestron	DMC-4K-HD	Video			AV	
IDF	AVF International	CR1016EX	Racks	IDF		AV	
LAN SW Type 2 #1	Cisco	3560CG-8PC-S	Network			AV	Provide 1- GLC-T Module
LK Type 2	Custom	LK-1	Panels	Lectern		AV	See Panel Elevation
LS-Type 2	JBL	Control 47C/T				AV	
PA	Lab Gruppen	LUCIA 240/2M	Audio			AV	
PC	OFE	PC	Presentation	Podium		OFE	Verify configuration with owner, terminate video as required.
PC MON	Dell	P2214H	Displays	Lectern	NA	AV	
PL	Spectrum	#55211BWMOD	Frames			AV	Grey with Cherry Trim, provide left side flip-up Shelf Part #55219, submit for approval prior to procurement.
PP	Custom	PP-664	AV	Wall	NA	AV	
PRJ Type 2	Panasonic	PT-EZ570U	Projection	Flush ceiling	NA	AV	Provide lens to meet the projection geometry, see plans.
RF AV	Crestron	AM-100	Presentation	Podium		AV/OFE	
RF RX	Shure	ULXD4	Microphones	MDF	MDF	AV	Provide remote antennae at locations shown on plans. Provide the following Shure accessories: ULXD1, ULXD2 transmitter, SB900 battery (2), SBC200 Charging Station, MX150 Lavalier, Countryman E6.
SCN	Draper	Access XT1000/V	Projection	Screen Wall	NA	AV	Provide low-voltage control interface module as required to support dry contact wall switch and AV control system interface. See electrical plans. Refer to Draper Quote# 507286- 005.
TP ANNO	Smart	SP518-NB	Presentation	Podium	Podium	AV/OFE	
TUNER	Generic	Tuner	Program			AV/OFE	Coordinate procurement with CATV vendor.
UTP TX	Crestron	DM-TX-200-C-2G	AV			AV	Power over DM, or provide power supply.

LAN Port & Switch Schedule

Switch#	Switch Product	Port#	Connected To	Cable	Provided By	Installed By
11	11	11	11	11	11	11
LAN SW Type 2 #1	Cisco WS-C3560CG-8PC-S with (1) one GLC-T= (mini-GBIC)	1	Projector RX	CAT6	AV Contractor	AV Contractor
LAN SW Type 2 #1	Cisco WS-C3560CG-8PC-S with (1) one GLC-T= (mini-GBIC)	2	Projector RX	CAT6	AV Contractor	AV Contractor
LAN SW Type 2 #1	Cisco WS-C3560CG-8PC-S with (1) one GLC-T= (mini-GBIC)	3	Projector RX	CAT6	AV Contractor	AV Contractor
LAN SW Type 2 #1	Cisco WS-C3560CG-8PC-S with (1) one GLC-T= (mini-GBIC)	3	Projector RX	CAT6	AV Contractor	AV Contractor
LAN SW Type 2 #1	Cisco WS-C3560CG-8PC-S with (1) one GLC-T= (mini-GBIC)	4	Projector RX	CAT6	AV Contractor	AV Contractor
LAN SW Type 2 #1	Cisco WS-C3560CG-8PC-S with (1) one GLC-T= (mini-GBIC)	5	Projector RX	CAT6	AV Contractor	AV Contractor
LAN SW Type 2 #2	Cisco WS-C3560CG-8PC-S with (1) one GLC-T= (mini-GBIC)	4	AV SW	CAT6	AV Contractor	AV Contractor
LAN SW Type 2 #2	Cisco WS-C3560CG-8PC-S with (1) one GLC-T= (mini-GBIC)	6	TL	CAT6	AV Contractor	AV Contractor
LAN SW Type 2 #2	Cisco WS-C3560CG-8PC-S with (1) one GLC-T= (mini-GBIC)	6	TL	CAT6	AV Contractor	AV Contractor
LAN SW Type 2 #2	Cisco WS-C3560CG-8PC-S with (1) one GLC-T= (mini-GBIC)	6	TL	CAT6	AV Contractor	AV Contractor
LAN SW Type 2 #2	Cisco WS-C3560CG-8PC-S with (1) one GLC-T= (mini-GBIC)	8	AV SW	CAT6	AV Contractor	AV Contractor

Cable Schedule

Number	Signal Type	Origin	Destination	Wire Type	Termination
2619	21	21	21	21	21
101	LAN	AUX RK	LAN SW Type 2	CAT6	RJ45
103	LAN	AV SW Type 2	LAN SW Type 2	CAT6	RJ45
104	DM	AV SW Type 2	LK-1	DM	RJ45
106	IR Control	AV SW Type 2	VD Type 2	3-cond stranded, 20AV	Euro/Screw
105	HDMI	AV SW Type 2	VD Type 2	HDMI	HDMI
118	Audio	Codec	AV SW	West Penn 452	Euro
119	x	Codec	AV SW	West Penn 452	Euro
132	DM	DM OUTPUT	FC RX	DM	RJ45
133	DM	DM OUTPUT	FC RX	DM	RJ45
111	DVI/HDMI	DOC CAM	AV SW	HDMI	DVI Adapter, HDMI
115	Crestron DM	FP	AV SW	As recommended by m	RJ45
116	Crestron DM	FP	AV SW	As recommended by m	RJ45
122	LAN	LAN SWY Type 2	LK-1	CAT6	RJ45
123	Spkr	PA Type 1	LS Type 1	West Penn 225	Solder, Crimp
124	Spkr	PA Type 1	LS Type 1	West Penn 225	Solder, Crimp
125	HDMI	PC	AV SW	HDMI	HDMI
126	HDMI	RF AV	AV SW	HDMI	HDMI
127	HDMI	RF AV	AV SW	HDMI	HDMI
128	DVI/HDMI	TP ANNO	AV SW	HDMI	DVI Adapter, HDMI
120	---	---	---	---	---
131	DM	UTP TX	AV SW	DM	RJ45
130	DM	UTP TX	AV SW	DM	RJ45

Gracenote Consulting, Inc.
Consultants in Acoustics & Audio Visual Technology

PO Box 3342
Meridian MS 39303

V: 601.207.0510
F: 601.500.5330

http://www.gracenoteconsulting.com

These drawings and their associated specifications, ideas, concepts, arrangements, designs and layouts are, and shall remain the property of the architect and consultant and no part thereof shall be copied, disclosed or distributed to any other party, or used in connection with any work or project other than the specific work as noted on these drawings without the express written permission of the consultant. Visual contact with these drawings or specifications or any other intellectual propery associated with the project shall constitute acceptance of this policy. © Copyright Gracenote Consulting, Inc.

STUDIO SOUTH
ARCHITECTS, PLLC

in association with

Eley Associates / Architects, P.A.

628 Washington Avenue, Suite C
Ocean Springs, MS 39564
228-762-8575 fax 769-9545

CONSULTANTS

STRUCTURAL

Structural Design Group
Contact: Thomas C. Schaeffer, P.E.
220 Great Circle Road Suite 106
Nashville, TN 37228
Tele: 615-255-5537

MECHANICAL

Eldridge & Associates, P.A.
Contact: Jimmy W. Eldridge, P.E.
604 HWY. 80 West Suite U
Clinton, MS
Tele: 601-925-5258

ELECTRICAL

Watkins & O'Gwynn
Contact: Holden O'Gwynn, Jr., P.E.
4523 Office Park Drive
Jackson, MS 39206
Tele: 601-982-3313

CIVIL

Ford Engineering Services, PLLC
Contact: Joel Ford
2010 Oak Grove Road
Building 4, Suite 1
Hattiesburg, MS 39402
Tele: 601-264-7296

PROFESSIONAL SEALS

PROJECT TITLE

GS# 108-261

School of Nursing Building

University of Southern Mississippi
(Institutions of Higher Learning)
Hattiesburg, MS

ISSUE

MARK	DATE	DESCRIPTION
	02-21-14	CONSTRUCTION DOCUMENTS
	10.1.15	Revised per owner's requirements
	12.1.15	AV Bid Documents
	4.4.16	AV Bid Documents Rev1

MANAGEMENT

PROJECT NO:
PROJECT AREA:
CAD DWG FILE:
DRAWN BY:
CHECKED BY:

SHEET TITLE

STANDARD CLASSROOM 121 SINGLE LINE & SCHEDULES

AV 3.11

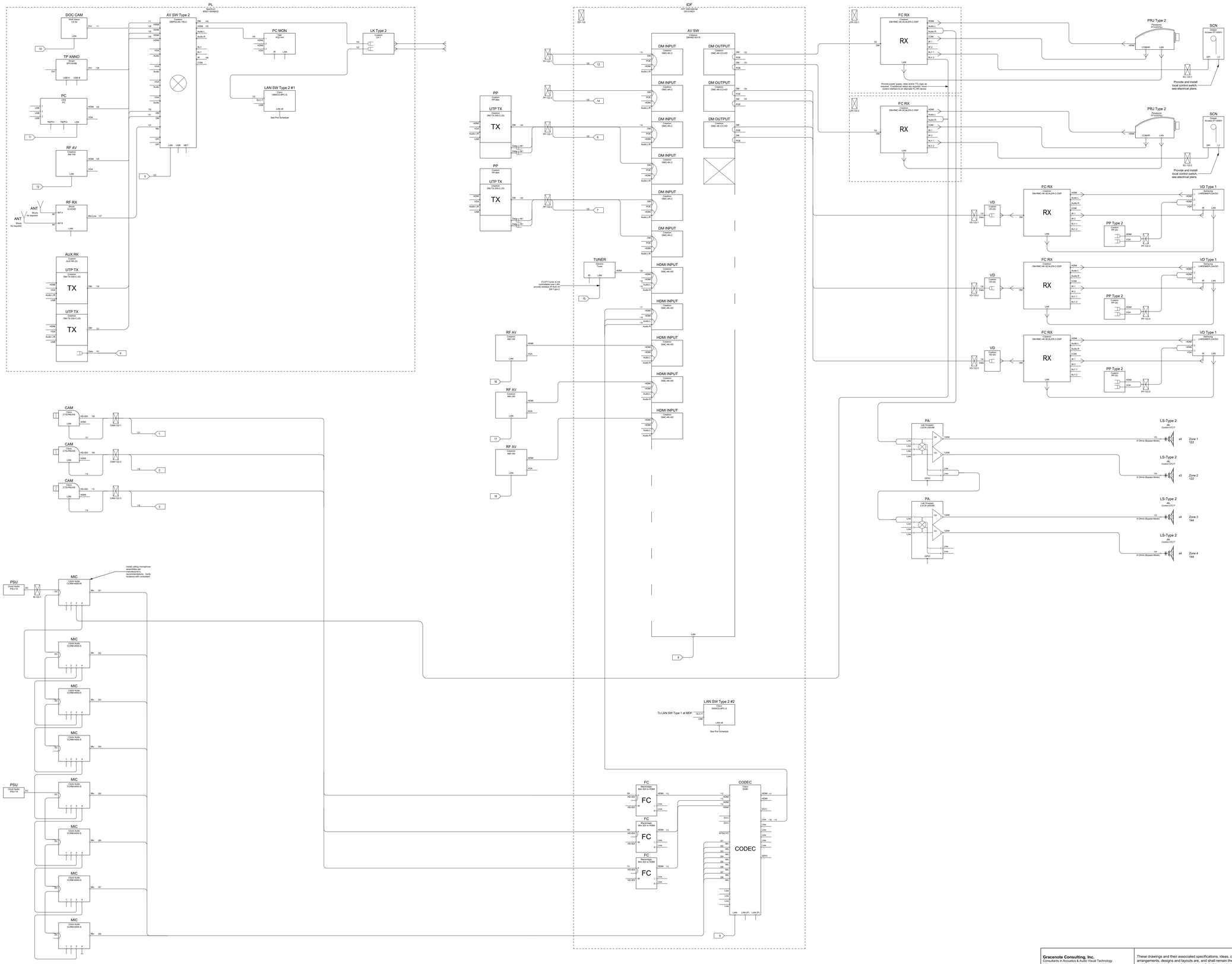

STUDIO SOUTH
ARCHITECTS, PLLC

in association with

Eley Associates / Architects, P.A.

628 Washington Avenue, Suite C
Ocean Springs, MS 39564
228-762-8575 fax 769-9545

CONSULTANTS

STRUCTURAL

Structural Design Group
Contact: Thomas C. Schaeffer, P.E.
220 Great Circle Road Suite 106
Nashville, TN 37228
Tele: 615-255-5537

MECHANICAL

Eldridge & Associates, P.A.
Contact: Jimmy W. Eldridge, P.E.
604 HWY. 80 West Suite U
Clinton, MS
Tele: 601-925-5258

ELECTRICAL

Watkins & O'Gwynn
Contact: Holden O'Gwynn, Jr., P.E.
4523 Office Park Drive
Jackson, MS 39206
Tele: 601-982-3313

CIVIL

Ford Engineering Services, PLLC
Contact: Joel Ford
2010 Oak Grove Road
Building 4, Suite 1
Hattiesburg, MS 39402
Tele: 601-264-7296

PROFESSIONAL SEALS

PROJECT TITLE

GS# 108-261

School of Nursing Building

University of Southern Mississippi
(Institutions of Higher Learning)
Hattiesburg, MS

ISSUE

MARK	DATE	DESCRIPTION
	02-21-14	CONSTRUCTION DOCUMENTS
	10.1.15	Revised per owner's requirements
	12.1.15	AV Bid Documents
	4.4.16	AV Bid Documents Rev1

MANAGEMENT

PROJECT NO:
PROJECT AREA:
CAD DWG FILE:
DRAWN BY:
CHECKED BY:

SHEET TITLE

STANDARD CLASSROOM
122 SINGLE LINE

AV 3.12

Gracenote Consulting, Inc.
Consultants in Acoustics & Audio Visual Technology

PO Box 3342
Meridian MS 39303

V: 601.207.0510
F: 601.500.5330

http://www.gracenoteconsulting.com

These drawings and their associated specifications, ideas, concepts, arrangements, designs and layouts are, and shall remain the property of the architect and consultant and no part thereof shall be copied, disclosed or distributed to any other party, or used in connection with any work or project other than the specific work as noted on these drawings without the express written permission of the consultant. Visual contact with these drawings or specifications or any other intellectual propery associated with the project shall constitute acceptance of this policy. © Copyright Gracenote Consulting, Inc.

Cable Schedule

Number	Signal Type	Origin	Destination	Wire Type	Termination
101	LAN	AUX RK	LAN SW Type 2	CAT6	RJ45
103	LAN	AV SW Type 2	LAN SW Type 2	CAT6	RJ45
104	DM	AV SW Type 2	LK-1	DM	RJ45
105	HDMI	AV SW Type 2	VD Type 2	HDMI	HDMI
106	IR Control	AV SW Type 2	VD Type 2	3-cond stranded, 20AV	Euro/Screw
108	HD-SDI	CAM	FC	Belden 1694A	RJ45
109	HD-SDI	CAM	FC	Belden 1694A	RJ45
110	HD-SDI	CAM	FC	Belden 1694A	RJ45
111	DVI/HDMI	DOC CAM	AV SW	HDMI	DVI Adapter, HDMI
112	HDMI	FC	Codec	HDMI	HDMI
113	HDMI	FC	Codec	HDMI	HDMI
114	HDMI	FC	Codec	HDMI	HDMI
115	Crestron DM	FP	AV SW	As recommended by n	RJ45
116	Crestron DM	FP	AV SW	As recommended by n	RJ45
117	HDMI	Codec	AV SW	HDMI	HDMI
118	---	---	---	---	---
119	---	---	---	---	---
120	---	---	---	---	---
121	Ethernet	FP	LAN SW	As recommended by n	RJ45
122	LAN	LAN SWY Type 2	LK-1	CAT6	RJ45
123	Spkr	PA Type 1	LS Type 1	West Penn 225	Solder, Crimp
124	Spkr	PA Type 1	LS Type 1	West Penn 225	Solder, Crimp
125	HDMI	PC	AV SW	HDMI	HDMI
126	HDMI	RF AV	AV SW	HDMI	HDMI
127	HDMI	RF AV	AV SW	HDMI	HDMI
128	DVI/HDMI	TP ANNO	AV SW	HDMI	DVI Adapter, HDMI
130	DM	UTP TX	AV SW	DM	RJ45
131	DM	UTP TX	AV SW	DM	RJ45
132	DM	DM OUTPUT	FC RX	DM	RJ45
133	DM	DM OUTPUT	FC RX	DM	RJ45
134	DM	DM OUTPUT	FC RX	DM	RJ45
135	DM	DM OUTPUT	FC RX	DM	RJ45
201	Mic	MIC	Codec	West Penn 452	XLR, Euro
202	Mic	MIC	Codec	West Penn 452	XLR, Euro
203	Mic	MIC	Codec	West Penn 452	XLR, Euro
204	Mic	MIC	Codec	West Penn 452	XLR, Euro
205	Mic	MIC	Codec	West Penn 452	XLR, Euro
206	Mic	MIC	Codec	West Penn 452	XLR, Euro
207	Mic	MIC	Codec	West Penn 452	XLR, Euro
208	Mic	MIC	Codec	West Penn 452	XLR, Euro

Equipment Schedule (provided for reference only. Refer to single line drawings, plans and specifications for contract requirements).

Designator	Manufacturer	Model	System	Location	Rack	Scope	Note
ANT	Shure	As required	Microphones	Lectern Rack	NA	AV	Provide mounts and cabling as required by the manufacturer.
AV SW Type 2	Crestron	DMPS3-4K-150-C				AV	
---	Cisco	3560CG-8PC-S	Network			AV	Provide 1- GLC-T Module
AUX RK	Custom	AUX RK-2U	AV	Lectern	Lectern	AV	
AV SW	Crestron	DM-MD16X16				AV/OFE	
CAM	Cisco	CTS-P60-K9	AV			AV	Provide power supply.
CODEC	Cisco	SX80	AV			AV/OFE	
DM INPUT	Crestron	DMC-4K-C	Video			AV	Provide DM-PSU where required, see connected input sources.
DM OUTPUT	Crestron	DMC-4K-CO-HD				AV	
DOC CAM	Wolf Vision	VZ-3s	Presentation	Lectern	NA	AV	Provide DVI/HDMI adapter as recommended by the manufacturer.
FC	Blackmagic	Mini SDI to HDMI	Video	MDF	NA	AV	Mount back of rack.
FC RX	Crestron	DM-RMC-4K-SCALER-C-DS	Projection	Ceiling	NA	AV	Mount at projector, verify location.
HDMI INPUT	Crestron	DMC-4K-HD	Video			AV	
IDF	AVF International	CR1016EX	Racks	IDF		AV	
LK Type 2	Custom	LK-1	Panels	Lectern		AV	See Panel Elevation
LS-Type 2	JBL	Control 47C/T				AV	
MIC	Clock Audio	CCRM-4000-M	Microhones	Ceiling		AV	Provide power supply, configure control I/O as required by manufacturer. Verify suspension height with consultant.
MIC	Clock Audio	CCRM-4000-S	Microhones	Ceiling		AV	Provide power supply, configure control I/O as required by manufacturer. Verify suspension height with consultant.
PA	Lab Gruppen	LUCIA 240/2M	Audio			AV	
PC	OFE	PC	Presentation	Podium		OFE	Verify configuration with owner, terminate video as required.
PC MON	Dell	P2214H	Displays	Lectern	NA	AV	
PL	Spectrum	#55211BWMOD	Frames			AV	Grey with Cherry Trim, provide left side flip-up Shelf Part #55219, submit for approval prior to procurement.
PP	Custom	PP-664	AV	Wall	NA	AV	
PP Type 2	Custom	PP-2G	Field Panels	Side Wall	NA	AV	
PRJ Type 2	Panasonic	PT-EZ570U	Projection	Flush ceiling	NA	AV	Provide lens to meet the projection geometry, see plans.
PSU	Clock Audio	PSU-18				AV/OFE	Provide as required by manufacturer.
RF AV	Crestron	AM-100	Presentation	Podium		AV/OFE	
RF RX	Shure	ULXD4	Microphones	MDF	MDF	AV	Provide remote antennae at locations shown on plans. Provide the following Shure accessories: ULXD1, ULXD2 transmitter, SB900 battery (2), SBC200 Charging Station, MX150 Lavalier, Countryman E6.
SCN	Draper	Access XT1000/V	Projection	Screen Wall	NA	AV	Provide low-voltage control interface module as required to support dry contact wall switch and AV control system interface. See electrical plans. Refer to Draper Quote# 507286- 005.
TP ANNO	Smart	SP518-NB	Presentation	Podium	Podium	AV/OFE	
TUNER	Generic	Tuner	Program			AV/OFE	Coordinate procurement with CATV vendor.
UTP TX	Crestron	DM-TX-200-C-2G	AV			AV	Power over DM, or provide power supply.
VD	Custom	VD-2G	Field Panels	Side Wall	NA	AV	
VD Type 1	Samsung	LH65DMEPLGA/GO	Displays	Side Wall	NA	Display	Provide bracket and support hardware as required.

LAN Port & Switch Schedule

Switch	Cisco WS-C3560CX Series with (1) one GLC-T= (mini-GBIC)	
Port#	**Connected To**	**Cable**
1	CAM	CAT6
2	CAM	CAT6
3	CAM	CAT6
4	AUX RK	CAT6
5	AV SW Type 2	CAT6
6	PP	CAT6
7	PP	CAT6
8	AV SW	CAT6
9	Codec	CAT6
10	DOC CAM	CAT6
11	PC	CAT6
12	RF AV	CAT6
13	FP-122-1	CAT6
14	FP-122-2	CAT6
15	TUNER	CAT6
16	RF AV	CAT6
17	RF AV	CAT6
18	RF AV	CAT6

STUDIO SOUTH
ARCHITECTS, PLLC

in association with
Eley Associates / Architects, P.A.
628 Washington Avenue, Suite C
Ocean Springs, MS 39564
228-762-8575 fax 769-9545

CONSULTANTS

STRUCTURAL
Structural Design Group
Contact: Thomas C. Schaeffer, P.E.
220 Great Circle Road Suite 106
Nashville, TN 37228
Tele: 615-255-5537

MECHANICAL
Eldridge & Associates, P.A.
Contact: Jimmy W. Eldridge, P.E.
604 HWY. 80 West Suite U
Clinton, MS
Tele: 601-925-5258

ELECTRICAL
Watkins & O'Gwynn
Contact: Holden O'Gwynn, Jr., P.E.
4523 Office Park Drive
Jackson, MS 39206
Tele: 601-982-3313

CIVIL
Ford Engineering Services, PLLC
Contact: Joel Ford
2010 Oak Grove Road
Building 4, Suite 1
Hattiesburg, MS 39402
Tele: 601-264-7296

PROFESSIONAL SEALS

PROJECT TITLE

GS# 108-261

School of Nursing Building

University of Southern Mississippi
(Institutions of Higher Learning)
Hattiesburg, MS

ISSUE

MARK	DATE	DESCRIPTION
	02-21-14	CONSTRUCTION DOCUMENTS
	10.1.15	Revised per owner's requirements
	12.1.15	AV Bid Documents
	4.4.16	AV Bid Documents Rev1

MANAGEMENT
PROJECT NO:
PROJECT AREA:
CAD DWG FILE:
DRAWN BY:
CHECKED BY:

SHEET TITLE

STANDARD CLASSROOM
122 SCHEDULES

AV 3.13

Gracenote Consulting, Inc.
Consultants in Acoustics & Audio Visual Technology

PO Box 3342
Meridian MS 39303

V: 601.207.0510
F: 601.500.5330

http://www.gracenoteconsulting.com

These drawings and their associated specifications, ideas, concepts, arrangements, designs and layouts are, and shall remain the property of the architect and consultant and no part thereof shall be copied, disclosed or distributed to any other party, or used in connection with any work or project other than the specific work as noted on these drawings without the express written permission of the consultant. Visual contact with these drawings or specifications or any other intellectual propery associated with the project shall constitute aceptance of this policy. © Copyright Gracenote Consulting, Inc.

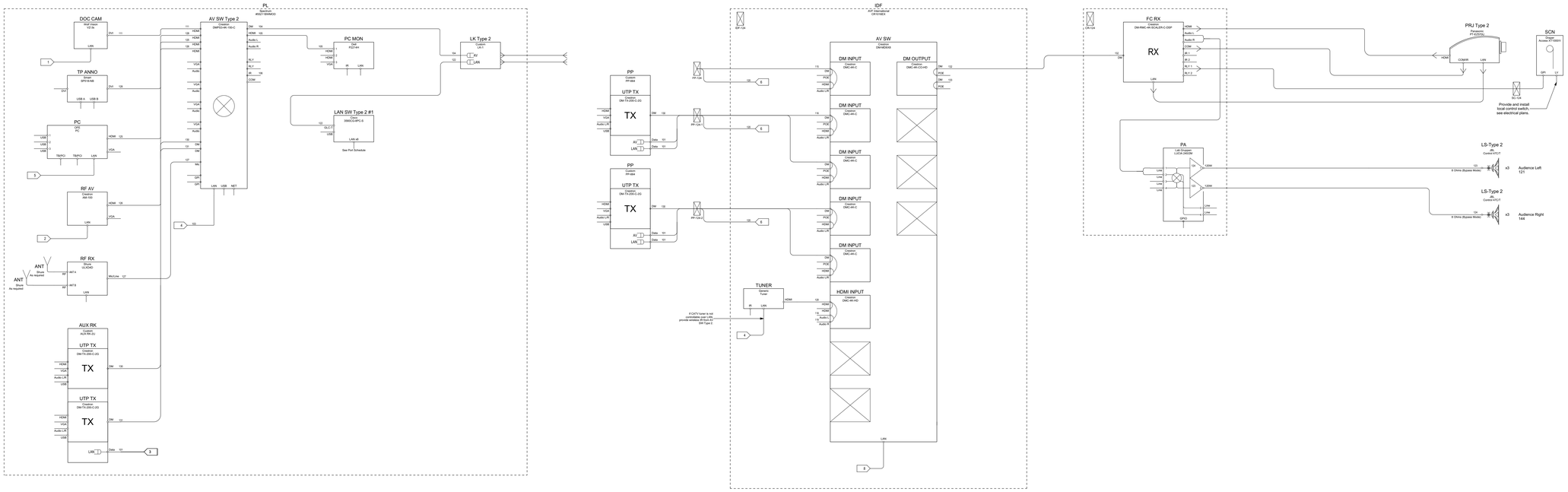

Equipment Schedule (provided for reference only. Refer to single line drawings, plans and specifications for contract requirements).

Designator	Manufacturer	Model	System	Location	Rack	Scope	Note
ANT	Shure	As required	Microphones	Lectern Rack	NA	AV	Provide mounts and cabling as required by the manufacturer.
AUX RK	Custom	AUX RK-2U	AV	Lectern	Lectern	AV	
AV SW	Crestron	DM-MD8X8				AV/OFE	
AV SW Type 2	Crestron	DMPS3-4K-150-C				AV	
DM INPUT	Crestron	DMC-4K-C	Video			AV	Provide DM-PSU where required, see connected input sources.
DM OUTPUT	Crestron	DMC-4K-CO-HD				AV	
DOC CAM	Wolf Vision	VZ-3s	Presentation	Lectern	NA	AV	Provide DVI/HDMI adapter as recommended by the manufacturer.
FC RX	Crestron	DM-RMC-4K-SCALER-C-DS	Projection	Ceiling	NA	AV	Mount at projector, verify location.
HDMI INPUT	Crestron	DMC-4K-HD	Video			AV	
IDF	AVF International	CR1016EX	Racks	IDF		AV	
LAN SW Type 2 #1	Cisco	3560CG-8PC-S	Network			AV	Provide 1- GLC-T Module
LK Type 2	Custom	LK-1	Panels	Lectern		AV	See Panel Elevation
LS-Type 2	JBL	Control 47C/T				AV	
PA	Lab Gruppen	LUCIA 240/2M	Audio			AV	
PC	OFE	PC	Presentation	Podium		OFE	Verify configuration with owner, terminate video as required.
PC MON	Dell	P2214H	Displays	Lectern	NA	AV	
PL	Spectrum	#55211BWMOD	Frames			AV	Grey with Cherry Trim, provide left side flip-up Shelf Part #55219, submit for approval prior to procurement.
PP	Custom	PP-664	AV	Wall	NA	AV	
PRJ Type 2	Panasonic	PT-EZ570U	Projection	Flush ceiling	NA	AV	Provide lens to meet the projection geometry, see plans.
RF AV	Crestron	AM-100	Presentation	Podium		AV/OFE	
RF RX	Shure	ULXD4	Microphones	MDF	MDF	AV	Provide remote antennae at locations shown on plans. Provide the following Shure accessories: ULXD1, ULXD2 transmitter, SB900 battery (2), SBC200 Charging Station, MX150 Lavalier, Countryman E6.
SCN	Draper	Access XT1000/V	Projection	Screen Wall	NA	AV	Provide low-voltage control interface module as required to support dry contact wall switch and AV control system interface. See electrical plans. Refer to Draper Quote# 507286- 005.
TP ANNO	Smart	SP518-NB	Presentation	Podium	Podium	AV/OFE	
TUNER	Generic	Tuner	Program			AV/OFE	Coordinate procurement with CATV vendor.
UTP TX	Crestron	DM-TX-200-C-2G	AV			AV	Power over DM, or provide power supply.

LAN Port & Switch Schedule

Switch#	Switch Product	Port#	Connected To	Cable	Provided By	Installed By
LAN SW Type 2 #1	Cisco WS-C3560CG-8PC-S with (1) one GLC-T= (mini-GBIC)	1	Projector RX	CAT6	AV Contractor	AV Contractor
LAN SW Type 2 #1	Cisco WS-C3560CG-8PC-S with (1) one GLC-T= (mini-GBIC)	2	Projector RX	CAT6	AV Contractor	AV Contractor
LAN SW Type 2 #1	Cisco WS-C3560CG-8PC-S with (1) one GLC-T= (mini-GBIC)	3	Projector RX	CAT6	AV Contractor	AV Contractor
LAN SW Type 2 #1	Cisco WS-C3560CG-8PC-S with (1) one GLC-T= (mini-GBIC)	3	Projector RX	CAT6	AV Contractor	AV Contractor
LAN SW Type 2 #1	Cisco WS-C3560CG-8PC-S with (1) one GLC-T= (mini-GBIC)	4	Projector RX	CAT6	AV Contractor	AV Contractor
LAN SW Type 2 #1	Cisco WS-C3560CG-8PC-S with (1) one GLC-T= (mini-GBIC)	5	Projector RX	CAT6	AV Contractor	AV Contractor
LAN SW Type 2 #2	Cisco WS-C3560CG-8PC-S with (1) one GLC-T= (mini-GBIC)	4	AV SW	CAT6	AV Contractor	AV Contractor
LAN SW Type 2 #2	Cisco WS-C3560CG-8PC-S with (1) one GLC-T= (mini-GBIC)	6	TL	CAT6	AV Contractor	AV Contractor
LAN SW Type 2 #2	Cisco WS-C3560CG-8PC-S with (1) one GLC-T= (mini-GBIC)	6	TL	CAT6	AV Contractor	AV Contractor
LAN SW Type 2 #2	Cisco WS-C3560CG-8PC-S with (1) one GLC-T= (mini-GBIC)	6	TL	CAT6	AV Contractor	AV Contractor
LAN SW Type 2 #2	Cisco WS-C3560CG-8PC-S with (1) one GLC-T= (mini-GBIC)	8	AV SW	CAT6	AV Contractor	AV Contractor

Cable Schedule

Number	Signal Type	Origin	Destination	Wire Type	Termination
2619	21	21	21	21	21
101	LAN	AUX RK	LAN SW Type 2	CAT6	RJ45
103	LAN	AV SW Type 2	LAN SW Type 2	CAT6	RJ45
104	DM	AV SW Type 2	LK-1	DM	RJ45
106	IR Control	AV SW Type 2	VD Type 2	3-cond stranded, 20AV	Euro/Screw
105	HDMI	AV SW Type 2	VD Type 2	HDMI	HDMI
118	Audio	Codec	AV SW	West Penn 452	Euro
119	x	Codec	AV SW	West Penn 452	Euro
132	DM	DM OUTPUT	FC RX	DM	RJ45
133	DM	DM OUTPUT	FC RX	DM	RJ45
111	DVI/HDMI	DOC CAM	AV SW	HDMI	DVI Adapter, HDMI
115	Crestron DM	FP	AV SW	As recommended by m	RJ45
116	Crestron DM	FP	AV SW	As recommended by m	RJ45
122	LAN	LAN SWY Type 2	LK-1	CAT6	RJ45
123	Spkr	PA Type 1	LS Type 1	West Penn 225	Solder, Crimp
124	Spkr	PA Type 1	LS Type 1	West Penn 225	Solder, Crimp
125	HDMI	PC	AV SW	HDMI	HDMI
126	HDMI	RF AV	AV SW	HDMI	HDMI
127	HDMI	RF AV	AV SW	HDMI	HDMI
128	DVI/HDMI	TP ANNO	AV SW	HDMI	DVI Adapter, HDMI
120	---	---	---	---	---
131	DM	UTP TX	AV SW	DM	RJ45
130	DM	UTP TX	AV SW	DM	RJ45

Gracenote Consulting, Inc.
Consultants in Acoustics & Audio Visual Technology

PO Box 3342
Meridian MS 39303

V: 601.207.0510
F: 601.500.5330

http://www.gracenoteconsulting.com

These drawings and their associated specifications, ideas, concepts, arrangements, designs and layouts are, and shall remain the property of the architect and consultant and no part thereof shall be copied, disclosed or distributed to any other party, or used in connection with any work or project other than the specific work as noted on these drawings without the express written permission of the consultant. Visual contact with these drawings or specifications or any other intellectual propery associated with the project shall constitute acceptance of this policy. © Copyright Gracenote Consulting, Inc.

STUDIO SOUTH
ARCHITECTS, PLLC

in association with

Eley Associates / Architects, P.A.

628 Washington Avenue, Suite C
Ocean Springs, MS 39564
228-762-8575 fax 769-9545

CONSULTANTS

STRUCTURAL

Structural Design Group
Contact: Thomas C. Schaeffer, P.E.
220 Great Circle Road Suite 106
Nashville, TN 37228
Tele: 615-255-5537

MECHANICAL

Eldridge & Associates, P.A.
Contact: Jimmy W. Eldridge, P.E.
604 HWY. 80 West Suite U
Clinton, MS
Tele: 601-925-5258

ELECTRICAL

Watkins & O'Gwynn
Contact: Holden O'Gwynn, Jr., P.E.
4523 Office Park Drive
Jackson, MS 39206
Tele: 601-982-3313

CIVIL

Ford Engineering Services, PLLC
Contact: Joel Ford
2010 Oak Grove Road
Building 4, Suite 1
Hattiesburg, MS 39402
Tele: 601-264-7296

PROFESSIONAL SEALS

PROJECT TITLE

GS# 108-261

School of Nursing Building

University of Southern Mississippi
(Institutions of Higher Learning)
Hattiesburg, MS

ISSUE

MARK	DATE	DESCRIPTION
	02-21-14	CONSTRUCTION DOCUMENTS
	10.1.15	Revised per owner's requirements
	12.1.15	AV Bid Documents
	4.4.16	AV Bid Documents Rev1

MANAGEMENT

PROJECT NO:
PROJECT AREA:
CAD DWG FILE:
DRAWN BY:
CHECKED BY:

SHEET TITLE

STANDARD CLASSROOM 124 SINGLE LINE & SCHEDULES

AV 3.14

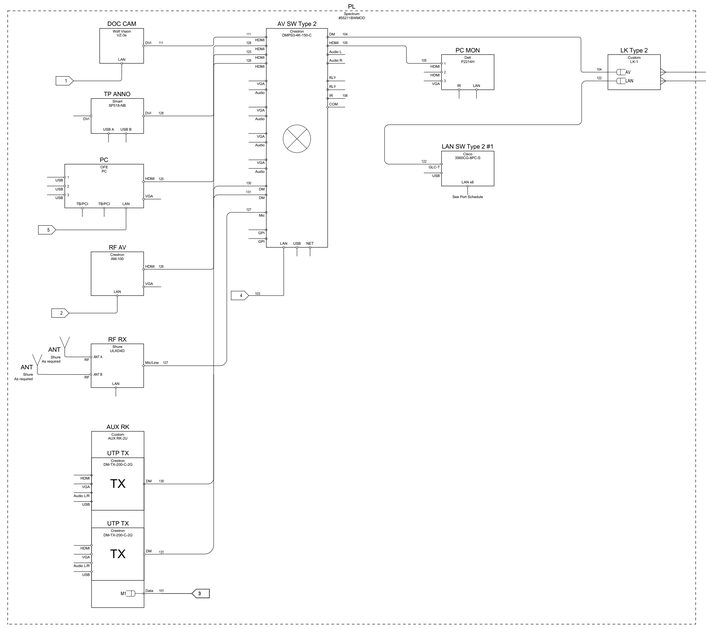

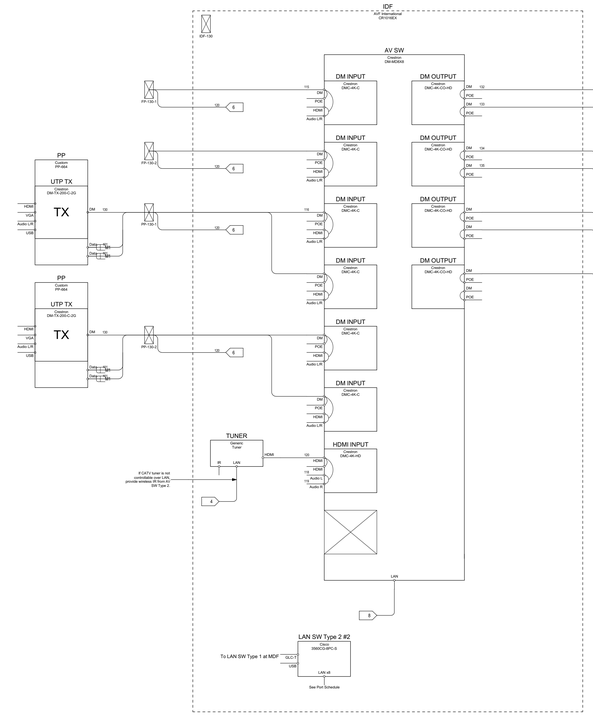

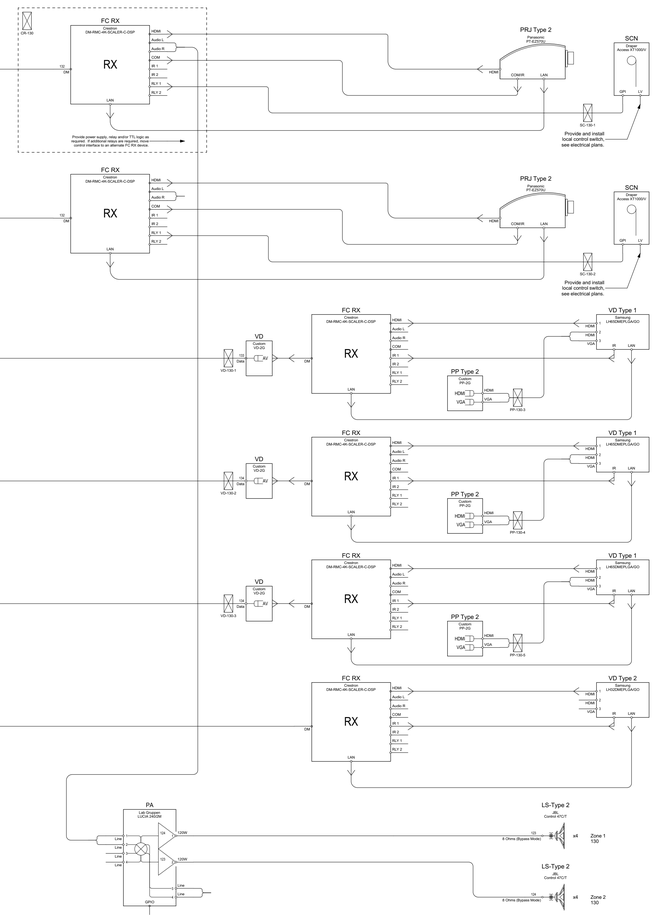

Equipment Schedule (provided for reference only. Refer to single line drawings, plans and specifications for contract requirements).

Designator	Manufacturer	Model	System	Location	Rack	Scope	Note
---	Cisco	3560CG-8PC-S	Network			AV	Provide 1- GLC-T Module
ANT	Shure	As required	Microphones	Lectern Rack	NA	AV	Provide mounts and cabling as required by the manufacturer.
AUX RK	Custom	AUX RK-2U	AV	Lectern	Lectern	AV	
AV SW	Crestron	DM-MD8X8				AV/OFE	
AV SW Type 2	Crestron	DMPS3-4K-150-C				AV	
DM INPUT	Crestron	DMC-4K-C	Video			AV	Provide DM-PSU where required, see connected input sources.
DM OUTPUT	Crestron	DMC-4K-CO-HD				AV	
DOC CAM	Wolf Vision	VZ-3s	Presentation	Lectern	NA	AV	Provide DVI/HDMI adapter as recommended by the manufacturer.
FC RX	Crestron	DM-RMC-4K-SCALER-C-DS	Projection	Ceiling	NA	AV	Mount at projector, verify location.
HDMI INPUT	Crestron	DMC-4K-HD	Video			AV	
IDF	AVF International	CR1016EX	Racks	IDF		AV	
LK Type 2	Custom	LK-1	Panels	Lectern		AV	See Panel Elevation
LS-Type 2	JBL	Control 47C/T				AV	
PA	Lab Gruppen	LUCIA 240/2M	Audio			AV	
PC	OFE	PC	Presentation	Podium		OFE	Verify configuration with owner, terminate video as required.
PC MON	Dell	P2214H	Displays	Lectern	NA	AV	
PL	Spectrum	#55211BWMOD	Frames			AV	Grey with Cherry Trim, provide left side flip-up Shelf Part #55219, submit for approval prior to procurement.
PP	Custom	PP-664	AV	Wall	NA	AV	
PP Type 2	Custom	PP-2G	Field Panels	Side Wall	NA	AV	
PRJ Type 2	Panasonic	PT-EZ570U	Projection	Flush ceiling	NA	AV	Provide lens to meet the projection geometry, see plans.
RF AV	Crestron	AM-100	Presentation	Podium		AV/OFE	
RF RX	Shure	ULXD4	Microphones	MDF	MDF	AV	Provide remote antennae at locations shown on plans. Provide the following Shure accessories: ULXD1, ULXD2 transmitter, SB900 battery (2), SBC200 Charging Station, MX150 Lavalier, Countryman E6.
SCN	Draper	Access XT1000/V	Projection	Screen Wall	NA	AV	Provide low-voltage control interface module as required to support dry contact wall switch and AV control system interface. See electrical plans. Refer to Draper Quote# 507286- 005.
TP ANNO	Smart	SP518-NB	Presentation	Podium	Podium	AV/OFE	
TUNER	Generic	Tuner	Program			AV/OFE	Coordinate procurement with CATV vendor.
UTP TX	Crestron	DM-TX-200-C-2G	AV			AV	Power over DM, or provide power supply.
VD	Custom	VD-2G	Field Panels	Side Wall	NA	AV	
VD Type 1	Samsung	LH65DMEPLGA/GO	Displays	Side Wall	NA	Display	Provide bracket and support hardware as required.
VD Type 2	Samsung	LH32DMEPLGA/GO	Displays	Projector, Center Line	NA	Display	Provide bracket and support hardware as required.

Cable Schedule

Number	Signal Type	Origin	Destination	Wire Type	Termination
101	LAN	AUX RK	LAN SW Type 2	CAT6	RJ45
103	LAN	AV SW Type 2	LAN SW Type 2	CAT6	RJ45
104	DM	AV SW Type 2	LK-1	DM	RJ45
106	IR Control	AV SW Type 2	VD Type 2	3-cond stranded, 20AW	Euro/Screw
105	HDMI	AV SW Type 2	VD Type 2	HDMI	HDMI
118	Audio	Codec	AV SW	West Penn 452	Euro
119	x	Codec	AV SW	West Penn 452	Euro
133	DM	DM OUTPUT	FC RX	DM	RJ45
134	DM	DM OUTPUT	FC RX	DM	RJ45
132	DM	DM OUTPUT	FC RX	DM	RJ45
135	DM	DM OUTPUT	FC RX	DM	RJ45
111	DVI/HDMI	DOC CAM	AV SW	HDMI	DVI Adapter, HDMI
115	Crestron DM	FP	AV SW	As recommended by m	RJ45
116	Crestron DM	FP	AV SW	As recommended by m	RJ45
122	LAN	LAN SWY Type 2	LK-1	CAT6	RJ45
123	Spkr	PA Type 1	LS Type 1	West Penn 225	Solder, Crimp
124	Spkr	PA Type 1	LS Type 1	West Penn 225	Solder, Crimp
125	HDMI	PC	AV SW	HDMI	HDMI
126	HDMI	RF AV	AV SW	HDMI	HDMI
128	DVI/HDMI	TP ANNO	AV SW	HDMI	DVI Adapter, HDMI
130	DM	UTP TX	AV SW	DM	RJ45
127	HDMI	RF AV	AV SW	HDMI	HDMI
131	DM	UTP TX	AV SW	DM	RJ45
120	---	---	---	---	---

LAN Port & Switch Schedule

Switch#	Switch Product	Port#	Connected To	Cable	Provided By	Installed By
LAN SW Type 2 #1	Cisco WS-C3560CG-8PC-S with (1) one GLC-T= (mini-GBIC)	1	Projector RX	CAT6	AV Contractor	AV Contractor
LAN SW Type 2 #1	Cisco WS-C3560CG-8PC-S with (1) one GLC-T= (mini-GBIC)	2	Projector RX	CAT6	AV Contractor	AV Contractor
LAN SW Type 2 #1	Cisco WS-C3560CG-8PC-S with (1) one GLC-T= (mini-GBIC)	3	Projector RX	CAT6	AV Contractor	AV Contractor
LAN SW Type 2 #1	Cisco WS-C3560CG-8PC-S with (1) one GLC-T= (mini-GBIC)	3	Projector RX	CAT6	AV Contractor	AV Contractor
LAN SW Type 2 #1	Cisco WS-C3560CG-8PC-S with (1) one GLC-T= (mini-GBIC)	4	Projector RX	CAT6	AV Contractor	AV Contractor
LAN SW Type 2 #1	Cisco WS-C3560CG-8PC-S with (1) one GLC-T= (mini-GBIC)	5	Projector RX	CAT6	AV Contractor	AV Contractor
LAN SW Type 2 #2	Cisco WS-C3560CG-8PC-S with (1) one GLC-T= (mini-GBIC)	4	AV SW	CAT6	AV Contractor	AV Contractor
LAN SW Type 2 #2	Cisco WS-C3560CG-8PC-S with (1) one GLC-T= (mini-GBIC)	6	TL	CAT6	AV Contractor	AV Contractor
LAN SW Type 2 #2	Cisco WS-C3560CG-8PC-S with (1) one GLC-T= (mini-GBIC)	6	TL	CAT6	AV Contractor	AV Contractor
LAN SW Type 2 #2	Cisco WS-C3560CG-8PC-S with (1) one GLC-T= (mini-GBIC)	6	TL	CAT6	AV Contractor	AV Contractor
LAN SW Type 2 #2	Cisco WS-C3560CG-8PC-S with (1) one GLC-T= (mini-GBIC)	8	AV SW	CAT6	AV Contractor	AV Contractor

Gracenote Consulting, Inc.
Consultants in Acoustics & Audio Visual Technology

PO Box 3342
Meridian MS 39303

V: 601.207.0510
F: 601.500.5330

http://www.gracenoteconsulting.com

These drawings and their associated specifications, ideas, concepts, arrangements, designs and layouts are, and shall remain the property of the architect and consultant and no part thereof shall be copied, disclosed or distributed to any other party, or used in connection with any work or project other than the specific work as noted on these drawings without the express written permission of the consultant. Visual contact with these drawings or specifications or any other intellectual propery associated with the project shall constitute acceptance of this policy. © Copyright Gracenote Consulting, Inc.

STUDIO SOUTH
ARCHITECTS, PLLC

in association with
Eley Associates / Architects, P.A.

628 Washington Avenue, Suite C
Ocean Springs, MS 39564
228-762-8575 fax 769-9545

CONSULTANTS

STRUCTURAL

Structural Design Group
Contact: Thomas C. Schaeffer, P.E.
220 Great Circle Road Suite 106
Nashville, TN 37228
Tele: 615-255-5537

MECHANICAL

Eldridge & Associates, P.A.
Contact: Jimmy W. Eldridge, P.E.
604 HWY. 80 West Suite U
Clinton, MS
Tele: 601-925-5258

ELECTRICAL

Watkins & O'Gwynn
Contact: Holden O'Gwynn, Jr., P.E.
4523 Office Park Drive
Jackson, MS 39206
Tele: 601-982-3313

CIVIL

Ford Engineering Services, PLLC
Contact: Joel Ford
2010 Oak Grove Road
Building 4, Suite 1
Hattiesburg, MS 39402
Tele: 601-264-7296

PROFESSIONAL SEALS

PROJECT TITLE

GS# 108-261

School of Nursing Building

University of Southern Mississippi
(Institutions of Higher Learning)
Hattiesburg, MS

ISSUE

MARK	DATE	DESCRIPTION
	02-21-14	CONSTRUCTION DOCUMENTS
	10.1.15	Revised per owner's requirements
	12.1.15	AV Bid Documents
	4.4.16	AV Bid Documents Rev1

MANAGEMENT

PROJECT NO:
PROJECT AREA:
CAD DWG FILE:
DRAWN BY:
CHECKED BY:

SHEET TITLE

SEMINAR ROOM 130
SINGLE LINE &
SCHEDULES

AV 3.15

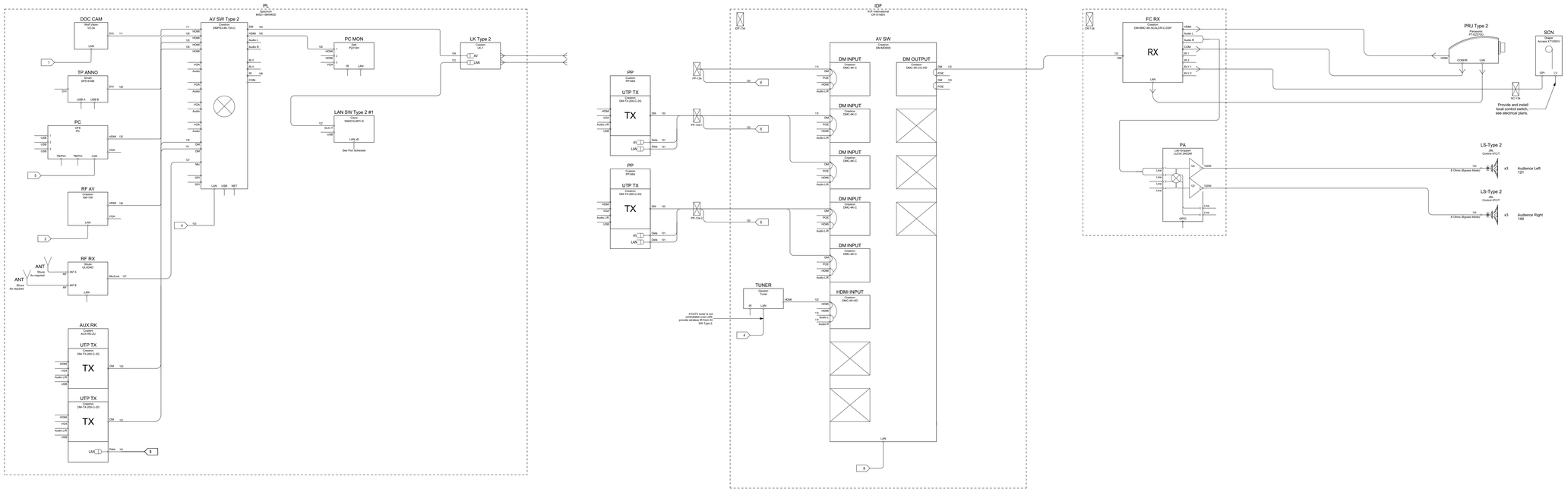

Equipment Schedule (provided for reference only. Refer to single line drawings, plans and specifications for contract requirements).

Designator	Manufacturer	Model	System	Location	Rack	Scope	Note
ANT	Shure	As required	Microphones	Lectern Rack	NA	AV	Provide mounts and cabling as required by the manufacturer.
AUX RK	Custom	AUX RK-2U	AV	Lectern	Lectern	AV	
AV SW	Crestron	DM-MD8X8				AV/OFE	
AV SW Type 2	Crestron	DMPS3-4K-150-C				AV	
DM INPUT	Crestron	DMC-4K-C	Video			AV	Provide DM-PSU where required, see connected input sources.
DM OUTPUT	Crestron	DMC-4K-CO-HD				AV	
DOC CAM	Wolf Vision	VZ-3s	Presentation	Lectern	NA	AV	Provide DVI/HDMI adapter as recommended by the manufacturer.
FC RX	Crestron	DM-RMC-4K-SCALER-C-DS	Projection	Ceiling	NA	AV	Mount at projector, verify location.
HDMI INPUT	Crestron	DMC-4K-HD	Video			AV	
IDF	AVF International	CR1016EX	Racks	IDF		AV	
LAN SW Type 2 #1	Cisco	3560CG-8PC-S	Network			AV	Provide 1- GLC-T Module
LK Type 2	Custom	LK-1	Panels	Lectern		AV	See Panel Elevation
LS-Type 2	JBL	Control 47C/T				AV	
PA	Lab Gruppen	LUCIA 240/2M	Audio			AV	
PC	OFE	PC	Presentation	Podium		OFE	Verify configuration with owner, terminate video as required.
PC MON	Dell	P2214H	Displays	Lectern	NA	AV	
PL	Spectrum	#55211BWMOD	Frames			AV	Grey with Cherry Trim, provide left side flip-up Shelf Part #55219, submit for approval prior to procurement.
PP	Custom	PP-664	AV	Wall	NA	AV	
PRJ Type 2	Panasonic	PT-EZ570U	Projection	Flush ceiling	NA	AV	Provide lens to meet the projection geometry, see plans.
RF AV	Crestron	AM-100	Presentation	Podium		AV/OFE	
RF RX	Shure	ULXD4	Microphones	MDF	MDF	AV	Provide remote antennae at locations shown on plans. Provide the following Shure accessories: ULXD1, ULXD2 transmitter, SB900 battery (2), SBC200 Charging Station, MX150 Lavalier, Countryman E6.
SCN	Draper	Access XT1000/V	Projection	Screen Wall	NA	AV	Provide low-voltage control interface module as required to support dry contact wall switch and AV control system interface. See electrical plans. Refer to Draper Quote# 507286- 005.
TP ANNO	Smart	SP518-NB	Presentation	Podium	Podium	AV/OFE	
TUNER	Generic	Tuner	Program			AV/OFE	Coordinate procurement with CATV vendor.
UTP TX	Crestron	DM-TX-200-C-2G	AV			AV	Power over DM, or provide power supply.

Cable Schedule

Number	Signal Type	Origin	Destination	Wire Type	Termination
2619	21	21	21	21	21
101	LAN	AUX RK	LAN SW Type 2	CAT6	RJ45
103	LAN	AV SW Type 2	LAN SW Type 2	CAT6	RJ45
104	DM	AV SW Type 2	LK-1	DM	RJ45
106	IR Control	AV SW Type 2	VD Type 2	3-cond stranded, 20AV	Euro/Screw
105	HDMI	AV SW Type 2	VD Type 2	HDMI	HDMI
118	Audio	Codec	AV SW	West Penn 452	Euro
119	x	Codec	AV SW	West Penn 452	Euro
132	DM	DM OUTPUT	FC RX	DM	RJ45
133	DM	DM OUTPUT	FC RX	DM	RJ45
111	DVI/HDMI	DOC CAM	AV SW	HDMI	DVI Adapter, HDMI
115	Crestron DM	FP	AV SW	As recommended by n	RJ45
116	Crestron DM	FP	AV SW	As recommended by n	RJ45
122	LAN	LAN SWY Type 2	LK-1	CAT6	RJ45
123	Spkr	PA Type 1	LS Type 1	West Penn 225	Solder, Crimp
124	Spkr	PA Type 1	LS Type 1	West Penn 225	Solder, Crimp
125	HDMI	PC	AV SW	HDMI	HDMI
126	HDMI	RF AV	AV SW	HDMI	HDMI
127	HDMI	RF AV	AV SW	HDMI	HDMI
128	DVI/HDMI	TP ANNO	AV SW	HDMI	DVI Adapter, HDMI
120	---	---	---	---	---
131	DM	UTP TX	AV SW	DM	RJ45
130	DM	UTP TX	AV SW	DM	RJ45

LAN Port & Switch Schedule

Switch#	Switch Product	Port#	Connected To	Cable	Provided By	Installed By
11	11	11	11	11	11	11
LAN SW Type 2 #1	Cisco WS-C3560CG-8PC-S with (1) one GLC-T= (mini-GBIC)	1	Projector RX	CAT6	AV Contractor	AV Contractor
LAN SW Type 2 #1	Cisco WS-C3560CG-8PC-S with (1) one GLC-T= (mini-GBIC)	2	Projector RX	CAT6	AV Contractor	AV Contractor
LAN SW Type 2 #1	Cisco WS-C3560CG-8PC-S with (1) one GLC-T= (mini-GBIC)	3	Projector RX	CAT6	AV Contractor	AV Contractor
LAN SW Type 2 #1	Cisco WS-C3560CG-8PC-S with (1) one GLC-T= (mini-GBIC)	3	Projector RX	CAT6	AV Contractor	AV Contractor
LAN SW Type 2 #1	Cisco WS-C3560CG-8PC-S with (1) one GLC-T= (mini-GBIC)	4	Projector RX	CAT6	AV Contractor	AV Contractor
LAN SW Type 2 #1	Cisco WS-C3560CG-8PC-S with (1) one GLC-T= (mini-GBIC)	5	Projector RX	CAT6	AV Contractor	AV Contractor
LAN SW Type 2 #2	Cisco WS-C3560CG-8PC-S with (1) one GLC-T= (mini-GBIC)	4	AV SW	CAT6	AV Contractor	AV Contractor
LAN SW Type 2 #2	Cisco WS-C3560CG-8PC-S with (1) one GLC-T= (mini-GBIC)	6	TL	CAT6	AV Contractor	AV Contractor
LAN SW Type 2 #2	Cisco WS-C3560CG-8PC-S with (1) one GLC-T= (mini-GBIC)	6	TL	CAT6	AV Contractor	AV Contractor
LAN SW Type 2 #2	Cisco WS-C3560CG-8PC-S with (1) one GLC-T= (mini-GBIC)	6	TL	CAT6	AV Contractor	AV Contractor
LAN SW Type 2 #2	Cisco WS-C3560CG-8PC-S with (1) one GLC-T= (mini-GBIC)	8	AV SW	CAT6	AV Contractor	AV Contractor

Gracenote Consulting, Inc.
Consultants in Acoustics & Audio Visual Technology

PO Box 3342
Meridian MS 39303

V: 601.207.0510
F: 601.500.5330

http://www.gracenoteconsulting.com

These drawings and their associated specifications, ideas, concepts, arrangements, designs and layouts are, and shall remain the property of the architect and consultant and no part thereof shall be copied, disclosed or distributed to any other party, or used in connection with any work or project other than the specific work as noted on these drawings without the express written permission of the consultant. Visual contact with these drawings or specifications or any other intellectual propery associated with the project shall constitute acceptance of this policy. © Copyright Gracenote Consulting, Inc.

STUDIO SOUTH
ARCHITECTS, PLLC

in association with

Eley Associates / Architects, P.A.

628 Washington Avenue, Suite C
Ocean Springs, MS 39564
228-762-8575 fax 769-9545

CONSULTANTS

STRUCTURAL

Structural Design Group
Contact: Thomas C. Schaeffer, P.E.
220 Great Circle Road Suite 106
Nashville, TN 37228
Tele: 615-255-5537

MECHANICAL

Eldridge & Associates, P.A.
Contact: Jimmy W. Eldridge, P.E.
604 HWY. 80 West Suite U
Clinton, MS
Tele: 601-925-5258

ELECTRICAL

Watkins & O'Gwynn
Contact: Holden O'Gwynn, Jr., P.E.
4523 Office Park Drive
Jackson, MS 39206
Tele: 601-982-3313

CIVIL

Ford Engineering Services, PLLC
Contact: Joel Ford
2010 Oak Grove Road
Building 4, Suite 1
Hattiesburg, MS 39402
Tele: 601-264-7296

PROFESSIONAL SEALS

PROJECT TITLE

GS# 108-261

School of Nursing Building

University of Southern Mississippi
(Institutions of Higher Learning)
Hattiesburg, MS

ISSUE

MARK	DATE	DESCRIPTION
	02-21-14	CONSTRUCTION DOCUMENTS
	10.1.15	Revised per owner's requirements
	12.1.15	AV Bid Documents
	4.4.16	AV Bid Documents Rev1

MANAGEMENT

PROJECT NO:

PROJECT AREA:

CAD DWG FILE:

DRAWN BY:

CHECKED BY:

SHEET TITLE

SEMINAR ROOM 134
SINGLE LINE &
SCHEDULES

AV 3.16

Equipment Schedule (provided for reference only. Refer to single line drawings, plans and specifications for contract requirements).

Designator	Manufacturer	Model	System	Location	Rack	Scope	Note
DS	Custom	DS-2G	Field Panels	Wall	NA	AV	
TP	Bittree	DSGIGE112	Infrastructure	MDF	MDF	AV	Provide 12- 18" CAT6 patch cables, black.
VD Type 2	Samsung	LH55DMEPLGA/GO	Displays	Wall	NA	AV	Provide bracket and support hardware as required.

Cable Schedule

Number	Signal Type	Origin	Destination	Wire Type	Termination
D101-1	LAN	OFE LAN SW	DS	West Penn 4246AF	RJ45
D102-2	Spare UTP	TP	DS	West Penn 4246AF	RJ45
D116-1	LAN	OFE LAN SW	DS	West Penn 4246AF	RJ45
D116-2	Spare UTP	TP	DS	West Penn 4246AF	RJ45
D125-1	LAN	OFE LAN SW	DS	West Penn 4246AF	RJ45
D125-2	Spare UTP	TP	DS	West Penn 4246AF	RJ45
D142-1	LAN	OFE LAN SW	DS	West Penn 4246AF	RJ45
D142-2	Spare UTP	TP	DS	West Penn 4246AF	RJ45
D202-1	LAN	OFE LAN SW	DS	West Penn 4246AF	RJ45
D202-2	Spare UTP	TP	DS	West Penn 4246AF	RJ45
D203-1	LAN	OFE LAN SW	DS	West Penn 4246AF	RJ45
D203-2	Spare UTP	TP	DS	West Penn 4246AF	RJ45
D203-3	LAN	OFE LAN SW	DS	West Penn 4246AF	RJ45
D203-4	Spare UTP	TP	DS	West Penn 4246AF	RJ45
D203-5	LAN	OFE LAN SW	DS	West Penn 4246AF	RJ45
D203-6	Spare UTP	TP	DS	West Penn 4246AF	RJ45
D203-7	LAN	OFE LAN SW	DS	West Penn 4246AF	RJ45
D203-8	Spare UTP	TP	DS	West Penn 4246AF	RJ45
D203-9	LAN	OFE LAN SW	DS	West Penn 4246AF	RJ45
D203-10	Spare UTP	TP	DS	West Penn 4246AF	RJ45
D281-1	LAN	OFE LAN SW	DS	West Penn 4246AF	RJ45
D281-2	Spare UTP	TP	DS	West Penn 4246AF	RJ45
D291-1	LAN	OFE LAN SW	DS	West Penn 4246AF	RJ45
D291-2	Spare UTP	TP	DS	West Penn 4246AF	RJ45
D291-3	LAN	OFE LAN SW	DS	West Penn 4246AF	RJ45
D291-4	Spare UTP	TP	DS	West Penn 4246AF	RJ45
D301-1	LAN	OFE LAN SW	DS	West Penn 4246AF	RJ45
D301-2	Spare UTP	TP	DS	West Penn 4246AF	RJ45

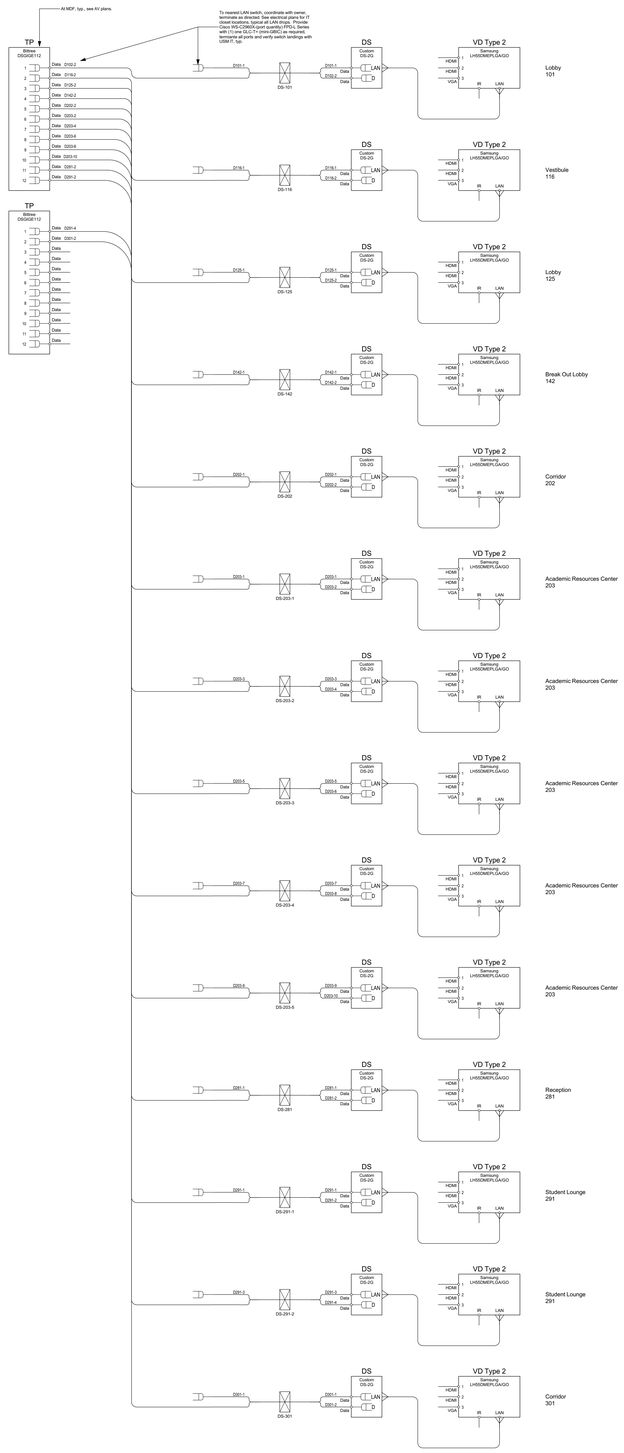

Gracenote Consulting, Inc.
Consultants in Acoustics & Audio Visual Technology

PO Box 3342
Meridian MS 39303

V: 601.207.0510
F: 601.500.5330

http://www.gracenoteconsulting.com

These drawings and their associated specifications, ideas, concepts, arrangements, designs and layouts are, and shall remain the property of the architect and consultant and no part thereof shall be copied, disclosed or distributed to any other party, or used in connection with any work or project other than the specific work as noted on these drawings without the express written permission of the consultant. Visual contact with these drawings or specifications or any other intellectual propery associated with the project shall constitute acceptance of this policy. © Copyright Gracenote Consulting, Inc.

STUDIO SOUTH
ARCHITECTS, PLLC

in association with

Eley Associates / Architects, P.A.

628 Washington Avenue, Suite C
Ocean Springs, MS 39564
228-762-8575 fax 769-9545

CONSULTANTS

STRUCTURAL

Structural Design Group
Contact: Thomas C. Schaeffer, P.E.
220 Great Circle Road Suite 106
Nashville, TN 37228
Tele: 615-255-5537

MECHANICAL

Eldridge & Associates, P.A.
Contact: Jimmy W. Eldridge, P.E.
604 HWY. 80 West Suite U
Clinton, MS
Tele: 601-925-5258

ELECTRICAL

Watkins & O'Gwynn
Contact: Holden O'Gwynn, Jr., P.E.
4523 Office Park Drive
Jackson, MS 39206
Tele: 601-982-3313

CIVIL

Ford Engineering Services, PLLC
Contact: Joel Ford
2010 Oak Grove Road
Building 4, Suite 1
Hattiesburg, MS 39402
Tele: 601-264-7296

PROFESSIONAL SEALS

PROJECT TITLE

GS# 108-261

School of Nursing Building

University of Southern Mississippi
(Institutions of Higher Learning)
Hattiesburg, MS

ISSUE

MARK	DATE	DESCRIPTION
	02-21-14	CONSTRUCTION DOCUMENTS
	10.1.15	Revised per owner's requirements
	12.1.15	AV Bid Documents
	4.4.16	AV Bid Documents Rev1

MANAGEMENT

PROJECT NO:
PROJECT AREA:
CAD DWG FILE:
DRAWN BY:
CHECKED BY:

SHEET TITLE

DIGITAL SIGNAGE DISTRIBUTION SINGLE LINE & SCHEDULES

AV 3.17

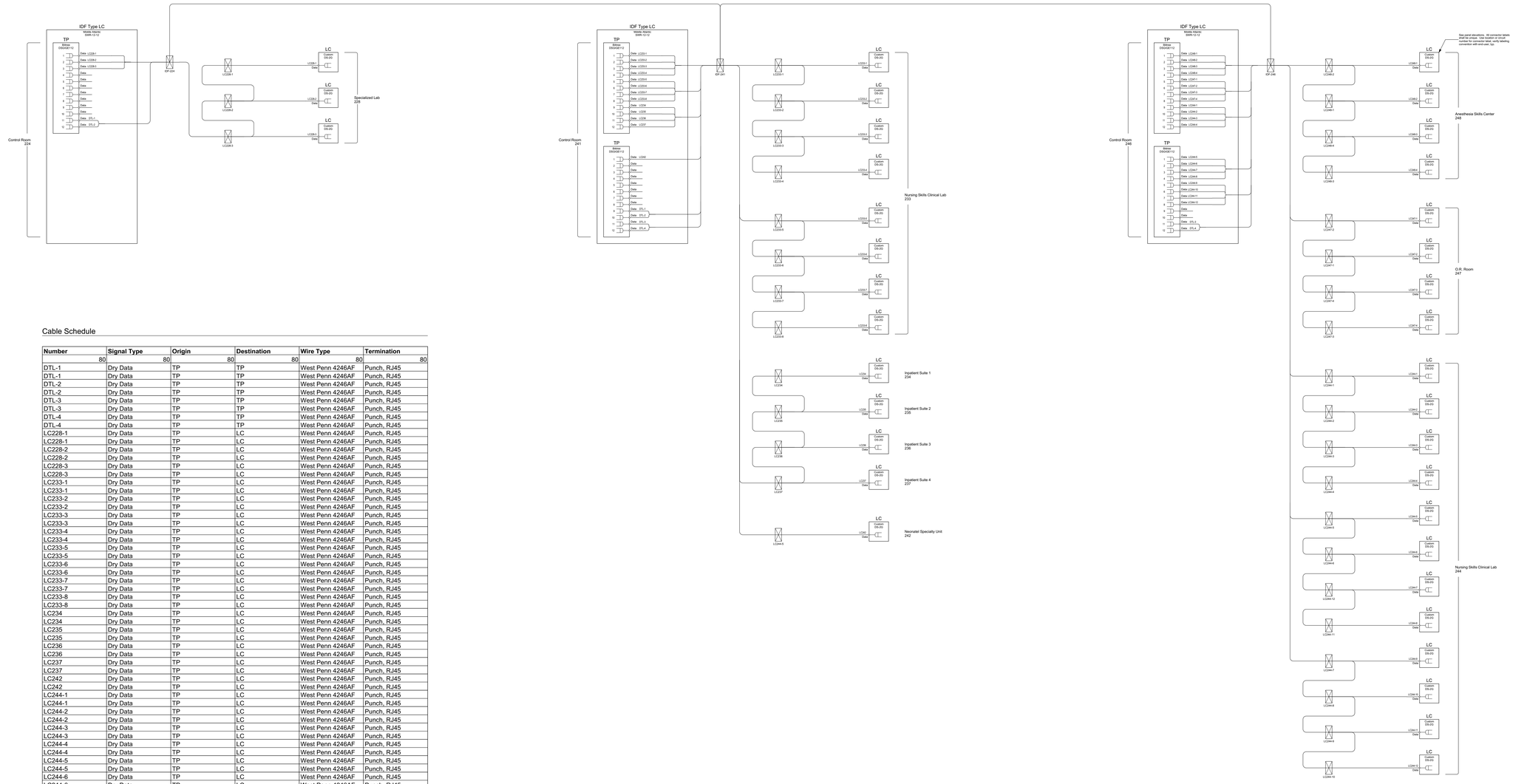

Cable Schedule

Number	Signal Type	Origin	Destination	Wire Type	Termination
80	80	80	80	80	80
DTL-1	Dry Data	TP	TP	West Penn 4246AF	Punch, RJ45
DTL-1	Dry Data	TP	TP	West Penn 4246AF	Punch, RJ45
DTL-2	Dry Data	TP	TP	West Penn 4246AF	Punch, RJ45
DTL-2	Dry Data	TP	TP	West Penn 4246AF	Punch, RJ45
DTL-3	Dry Data	TP	TP	West Penn 4246AF	Punch, RJ45
DTL-3	Dry Data	TP	TP	West Penn 4246AF	Punch, RJ45
DTL-4	Dry Data	TP	TP	West Penn 4246AF	Punch, RJ45
DTL-4	Dry Data	TP	TP	West Penn 4246AF	Punch, RJ45
LC228-1	Dry Data	TP	LC	West Penn 4246AF	Punch, RJ45
LC228-1	Dry Data	TP	LC	West Penn 4246AF	Punch, RJ45
LC228-2	Dry Data	TP	LC	West Penn 4246AF	Punch, RJ45
LC228-2	Dry Data	TP	LC	West Penn 4246AF	Punch, RJ45
LC228-3	Dry Data	TP	LC	West Penn 4246AF	Punch, RJ45
LC228-3	Dry Data	TP	LC	West Penn 4246AF	Punch, RJ45
LC233-1	Dry Data	TP	LC	West Penn 4246AF	Punch, RJ45
LC233-1	Dry Data	TP	LC	West Penn 4246AF	Punch, RJ45
LC233-2	Dry Data	TP	LC	West Penn 4246AF	Punch, RJ45
LC233-2	Dry Data	TP	LC	West Penn 4246AF	Punch, RJ45
LC233-3	Dry Data	TP	LC	West Penn 4246AF	Punch, RJ45
LC233-3	Dry Data	TP	LC	West Penn 4246AF	Punch, RJ45
LC233-4	Dry Data	TP	LC	West Penn 4246AF	Punch, RJ45
LC233-4	Dry Data	TP	LC	West Penn 4246AF	Punch, RJ45
LC233-5	Dry Data	TP	LC	West Penn 4246AF	Punch, RJ45
LC233-5	Dry Data	TP	LC	West Penn 4246AF	Punch, RJ45
LC233-6	Dry Data	TP	LC	West Penn 4246AF	Punch, RJ45
LC233-6	Dry Data	TP	LC	West Penn 4246AF	Punch, RJ45
LC233-7	Dry Data	TP	LC	West Penn 4246AF	Punch, RJ45
LC233-7	Dry Data	TP	LC	West Penn 4246AF	Punch, RJ45
LC233-8	Dry Data	TP	LC	West Penn 4246AF	Punch, RJ45
LC233-8	Dry Data	TP	LC	West Penn 4246AF	Punch, RJ45
LC234	Dry Data	TP	LC	West Penn 4246AF	Punch, RJ45
LC234	Dry Data	TP	LC	West Penn 4246AF	Punch, RJ45
LC235	Dry Data	TP	LC	West Penn 4246AF	Punch, RJ45
LC235	Dry Data	TP	LC	West Penn 4246AF	Punch, RJ45
LC236	Dry Data	TP	LC	West Penn 4246AF	Punch, RJ45
LC236	Dry Data	TP	LC	West Penn 4246AF	Punch, RJ45
LC237	Dry Data	TP	LC	West Penn 4246AF	Punch, RJ45
LC237	Dry Data	TP	LC	West Penn 4246AF	Punch, RJ45
LC242	Dry Data	TP	LC	West Penn 4246AF	Punch, RJ45
LC242	Dry Data	TP	LC	West Penn 4246AF	Punch, RJ45
LC244-1	Dry Data	TP	LC	West Penn 4246AF	Punch, RJ45
LC244-1	Dry Data	TP	LC	West Penn 4246AF	Punch, RJ45
LC244-2	Dry Data	TP	LC	West Penn 4246AF	Punch, RJ45
LC244-2	Dry Data	TP	LC	West Penn 4246AF	Punch, RJ45
LC244-3	Dry Data	TP	LC	West Penn 4246AF	Punch, RJ45
LC244-3	Dry Data	TP	LC	West Penn 4246AF	Punch, RJ45
LC244-4	Dry Data	TP	LC	West Penn 4246AF	Punch, RJ45
LC244-4	Dry Data	TP	LC	West Penn 4246AF	Punch, RJ45
LC244-5	Dry Data	TP	LC	West Penn 4246AF	Punch, RJ45
LC244-5	Dry Data	TP	LC	West Penn 4246AF	Punch, RJ45
LC244-6	Dry Data	TP	LC	West Penn 4246AF	Punch, RJ45
LC244-6	Dry Data	TP	LC	West Penn 4246AF	Punch, RJ45
LC244-7	Dry Data	TP	LC	West Penn 4246AF	Punch, RJ45
LC244-7	Dry Data	TP	LC	West Penn 4246AF	Punch, RJ45
LC244-8	Dry Data	TP	LC	West Penn 4246AF	Punch, RJ45
LC244-8	Dry Data	TP	LC	West Penn 4246AF	Punch, RJ45
LC244-9	Dry Data	TP	LC	West Penn 4246AF	Punch, RJ45
LC244-9	Dry Data	TP	LC	West Penn 4246AF	Punch, RJ45
LC244-10	Dry Data	TP	LC	West Penn 4246AF	Punch, RJ45
LC244-10	Dry Data	TP	LC	West Penn 4246AF	Punch, RJ45
LC244-11	Dry Data	TP	LC	West Penn 4246AF	Punch, RJ45
LC244-11	Dry Data	TP	LC	West Penn 4246AF	Punch, RJ45
LC244-12	Dry Data	TP	LC	West Penn 4246AF	Punch, RJ45
LC244-12	Dry Data	TP	LC	West Penn 4246AF	Punch, RJ45
LC247-1	Dry Data	TP	LC	West Penn 4246AF	Punch, RJ45
LC247-1	Dry Data	TP	LC	West Penn 4246AF	Punch, RJ45
LC247-2	Dry Data	TP	LC	West Penn 4246AF	Punch, RJ45
LC247-2	Dry Data	TP	LC	West Penn 4246AF	Punch, RJ45
LC247-3	Dry Data	TP	LC	West Penn 4246AF	Punch, RJ45
LC247-3	Dry Data	TP	LC	West Penn 4246AF	Punch, RJ45
LC247-4	Dry Data	TP	LC	West Penn 4246AF	Punch, RJ45
LC247-4	Dry Data	TP	LC	West Penn 4246AF	Punch, RJ45
LC248-1	Dry Data	TP	LC	West Penn 4246AF	Punch, RJ45
LC248-1	Dry Data	TP	LC	West Penn 4246AF	Punch, RJ45
LC248-2	Dry Data	TP	LC	West Penn 4246AF	Punch, RJ45
LC248-2	Dry Data	TP	LC	West Penn 4246AF	Punch, RJ45
LC248-3	Dry Data	TP	LC	West Penn 4246AF	Punch, RJ45
LC248-3	Dry Data	TP	LC	West Penn 4246AF	Punch, RJ45
LC248-4	Dry Data	TP	LC	West Penn 4246AF	Punch, RJ45
LC248-4	Dry Data	TP	LC	West Penn 4246AF	Punch, RJ45

Equipment Schedule (provided for reference only. Refer to single line drawings, plans and specifications for contract requirements).

Designator	Manufacturer	Model	System	Location	Rack	Scope	Note
3	3	3	3	3	3	3	1
IDF Type LC	Middle Atlantic	SWR-12-12	Racks	Control Room	IDF Type LC	AV	
LC	Custom	DS-2G	Field Panels	Wall	NA	AV	
TP	Bittree	DSGIGE112	Infrastructure	MDF	MDF	AV	Provide 12- 18" CAT6 patch cables, black.

Gracenote Consulting, Inc.
Consultants in Acoustics & Audio Visual Technology

PO Box 3342
Meridian MS 39303

V: 601.207.0510
F: 601.500.5330

http://www.gracenoteconsulting.com

These drawings and their associated specifications, ideas, concepts, arrangements, designs and layouts are, and shall remain the property of the architect and consultant and no part thereof shall be copied, disclosed or distributed to any other party, or used in connection with any work or project other than the specific work as noted on these drawings without the express written permission of the consultant. Visual contact with these drawings or specifications or any other intellectual propery associated with the project shall constitute acceptance of this policy. © Copyright Gracenote Consulting, Inc.

STUDIO SOUTH
ARCHITECTS, PLLC

in association with

Eley Associates / Architects, P.A.

628 Washington Avenue, Suite C
Ocean Springs, MS 39564
228-762-8575 fax 769-9545

CONSULTANTS

STRUCTURAL

Structural Design Group
Contact: Thomas C. Schaeffer, P.E.
220 Great Circle Road Suite 106
Nashville, TN 37228
Tele: 615-255-5537

MECHANICAL

Eldridge & Associates, P.A.
Contact: Jimmy W. Eldridge, P.E.
604 HWY. 80 West Suite U
Clinton, MS
Tele: 601-925-5258

ELECTRICAL

Watkins & O'Gwynn
Contact: Holden O'Gwynn, Jr., P.E.
4523 Office Park Drive
Jackson, MS 39206
Tele: 601-982-3313

CIVIL

Ford Engineering Services, PLLC
Contact: Joel Ford
2010 Oak Grove Road
Building 4, Suite 1
Hattiesburg, MS 39402
Tele: 601-264-7296

PROFESSIONAL SEALS

PROJECT TITLE

GS# 108-261

School of Nursing Building

University of Southern Mississippi
(Institutions of Higher Learning)
Hattiesburg, MS

ISSUE

MARK	DATE	DESCRIPTION
	02-21-14	CONSTRUCTION DOCUMENTS
	10.1.15	Revised per owner's requirements
	12.1.15	AV Bid Documents
	4.4.16	AV Bid Documents Rev1

MANAGEMENT

PROJECT NO:
PROJECT AREA:
CAD DWG FILE:
DRAWN BY:
CHECKED BY:

SHEET TITLE

LAB AREA DATA DISTRIBUTION SINGLE LINE & SCHEDULES

AV 3.18

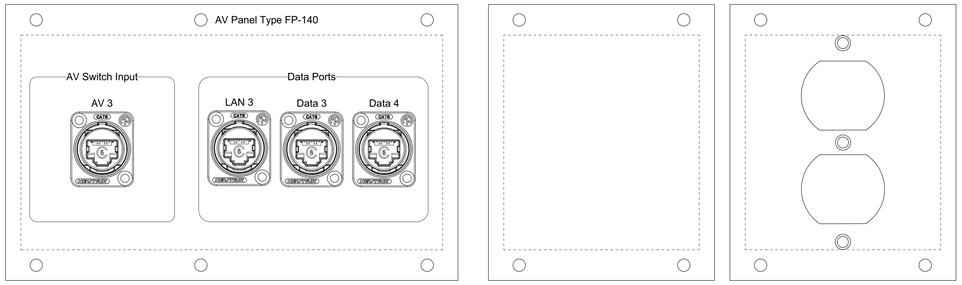

1 Floor Pocket Panel FP Type 1
Scale: Actual Size

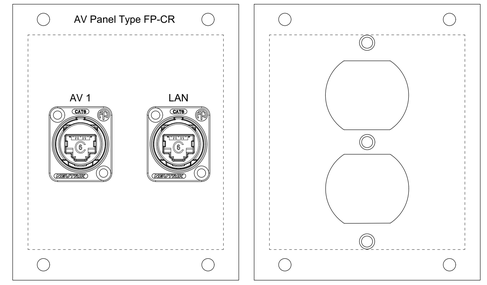

2 Floor Pocket FP Type 2
Scale: Actual Size

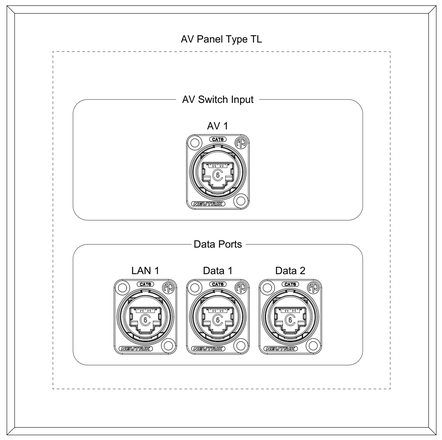

3 AV Panel Type TL
Scale: Actual Size

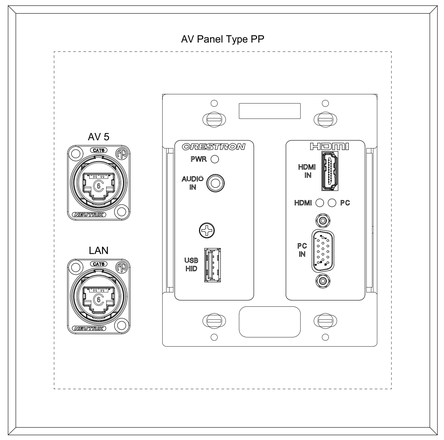

4 AV Panel Type PP
Scale: Actual Size

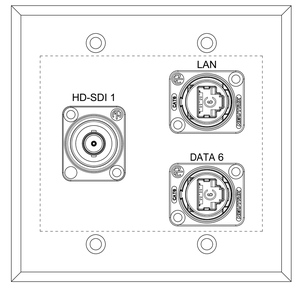

5 Panel Type CAM
Scale: Actual Size

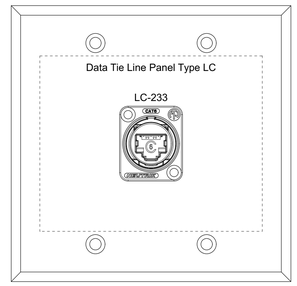

6 Panel Type LC
Scale: Actual Size

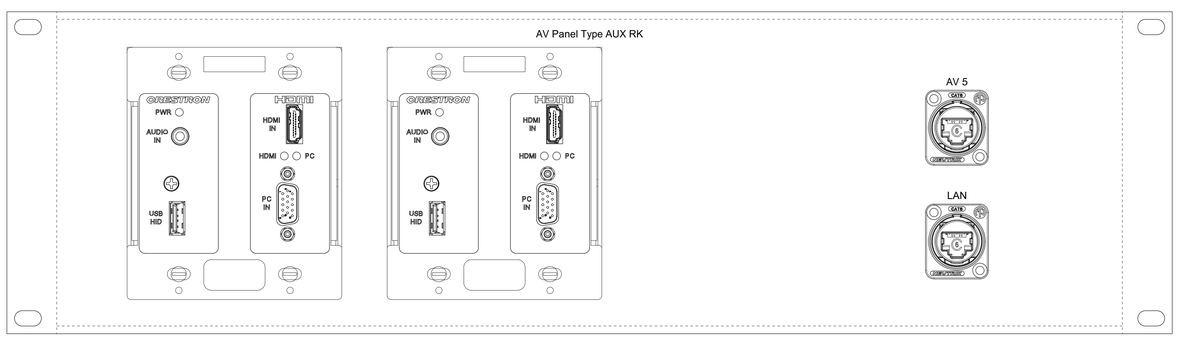

7 Auxiliary Panel Type AUX RK
Scale: Actual Size

General Panel Notes
1. All exterior panel mounts shall be rivets or tamper proof screws UON, submit detail.
2. All panels shall be brushed, black anodized 1/8" aluminum UON.
3. All text shall be at least 1/8" high bold characters. Engrave and fill in white ink.
4. Bevel all panel edges by 1/16".
5. Connector borders shall be engraved 1/8" thick, filled in white ink.
6. Connector compliment is typical, see single line drawings and specifations for details, submit for approval.
7. Each character shall have a unique number corresponding to the conductor number, see single lines.
8. Panel elevations are conceptual, refer to single line drawings for connection requirements.
9. Submit shop drawings for all panels.

Backboxes
1. Coordinate field panel installation with electrical contractor.
2. Isolate panel metal from backboxes where necessary.
3. Verify backboxes with electrical drawings and/or AV Raceway drawings for all panel locations.
4. Verify field conditions for all panel locations, adjust panel sizes or finish configuration as required.
5. Verify that all conduit is isolated from backbox metal. Do not couple signal ground to raceway system UON.
6. Where panels include 120VAC, coordinate with electrical contractor. Do not install high voltage circuits UON.

Connectors
1. All BNC connectors shall be as shown, isolated from chassis metal or Neutrik D Series UON.
2. All connectors shall be as shown UON.
3. All high-level audio connectors shall be Neutrik NL Type UON.
4. All RCA type connectors shall be Neutrik NF type.
5. All UTP data connectors shall be equal to CAT6 compliant, Neutrik etherCON Series UON.
6. All XLR type connectors shall be Neutrik DLX Series, solder cup type.
7. Match connector finish with panel color, verify all colors UON.
8. Provide optical connectors as shown, equal to Neutrik opticalCON Serieis. Verify circuiting requirements for all optical connectors with connected manufacturer's recommendation.

Gracenote Consulting, Inc.
Consultants in Acoustics & Audio Visual Technology

PO Box 3342
Meridian MS 39303

V: 601.207.0510
F: 601.500.5330

http://www.gracenoteconsulting.com

These drawings and their associated specifications, ideas, concepts, arrangements, designs and layouts are, and shall remain the property of the architect and consultant and no part thereof shall be copied, disclosed or distributed to any other party, or used in connection with any work or project other than the specific work as noted on these drawings without the express written permission of the consultant. Visual contact with these drawings or specifications or any other intellectual propery associated with the project shall constitute acceptance of this policy. © Copyright Gracenote Consulting, Inc.

STUDIO SOUTH
ARCHITECTS, PLLC

in association with
Eley Associates / Architects, P.A.

628 Washington Avenue, Suite C
Ocean Springs, MS 39564
228-762-8575 fax 769-9545

CONSULTANTS

STRUCTURAL

Structural Design Group
Contact: Thomas C. Schaeffer, P.E.
220 Great Circle Road Suite 106
Nashville, TN 37228
Tele: 615-255-5537

MECHANICAL

Eldridge & Associates, P.A.
Contact: Jimmy W. Eldridge, P.E.
604 HWY. 80 West Suite U
Clinton, MS
Tele: 601-925-5258

ELECTRICAL

Watkins & O'Gwynn
Contact: Holden O'Gwynn, Jr., P.E.
4523 Office Park Drive
Jackson, MS 39206
Tele: 601-982-3313

CIVIL

Ford Engineering Services, PLLC
Contact: Joel Ford
2010 Oak Grove Road
Building 4, Suite 1
Hattiesburg, MS 39402
Tele: 601-264-7296

PROFESSIONAL SEALS

PROJECT TITLE

GS# 108-261

School of Nursing Building

University of Southern Mississippi
(Institutions of Higher Learning)
Hattiesburg, MS

ISSUE

MARK	DATE	DESCRIPTION
	02-21-14	CONSTRUCTION DOCUMENTS
	10.1.15	Revised per owner's requirements
	12.1.15	AV Bid Documents
	4.4.16	AV Bid Documents Rev1

MANAGEMENT

PROJECT NO:
PROJECT AREA:
CAD DWG FILE:
DRAWN BY:
CHECKED BY:

SHEET TITLE

AV PANEL ELEVATIONS
(1 of 2)

AV 4.1